THE THIRTY-THIRD UBC PHYSICS OLYMPICS RULE BOOK

March 12, 2011

Financial sponsorship is provided by the Rex Boughton Memorial Fund.

The UBC Physics Olympics is organized by the Department of Physics and Astronomy with assistance from the Department of Curriculum & Pedagogy (Science Education).

Version 2, 22 February 2011

General Rules

Each school may enter one team of students, which participates in all 6 events. A team may have a maximum of 10 registered students, of which at most 5 participate in a given event. Events are designed so undersized teams are not penalized. Each event is run in 6 heats lasting about 1 hour each, with approximately 10 schools participating in each heat. There is a break for lunch (not provided, but the Student Union Building is across the street from Hennings). Gold, Silver, and Bronze medals will be awarded to the members of the top teams in each event. A trophy will be awarded to the school sponsoring the team with the best combined score.

The combined score of a team is the sum of their decibel scores in the 6 events. The schools are ranked by score in each event, and the decibel score for the event is $\mathrm{dB} = 10 \times \log_{10}(\mathrm{rank})$. Thus a first place ranking in an event is 0 dB, second is 3.01 dB, fifth is 6.99 dB, tenth is 10 dB, twentieth is 13.01 dB. The overall winner is the school with the lowest total decibels.

Interpretation of Rules

Normal physics interpretations will be applied to all the terminology used in defining the challenges. Those solutions which, in the opinion of the event judges, do not comply with the spirit and intent of the rules will be disqualified from the event (and thus ranked last for the event). The ruling of the event judges is final.

Pre-Build Events

There are two events which require teams to design and build devices before the event. Pre-built devices will be checked in to a storage room until required for a heat. Modifications are not allowed after arrival, except for repairs of damage sustained in transit.

The pre-built events are intended to be learning experiences for the students, so we ask that team coaches resist the urge to overly involve themselves in the design and construction.

Winning solutions will typically push up against the limits of the rules, but violating the rules will result in disqualification. To avoid this disappointment, teams are encouraged to contact the Physics Olympics organizers for a preliminary evaluation about whether their design is within the rules. However, the ruling of the event judge about the legality of a pre-built device at the time of the competition is final, and overrides any preliminary evaluation.

Please direct inquiries about the rules to Prof. Thomas Mattison, preferably by email to mattison@physics.ubc.ca or telephone 604-822-9690.

1. Gravity Golf

The goal is to build a device to drive a golf ball into a hole, using only gravitational potential energy from the weight of your device.

Your device will be suspended from a 100 cm x 100 cm “ceiling”. The ceiling has 36 closed-loop screw eyes on a 20 cm grid. The bottoms of the closed-loop screw eyes are 150 cm from the “tee surface,” and the wire is 3.5 mm in diameter. You may use any number of strings and hooks to attach your device to the “ceiling.” Your device may have a mass of no more than 5 kg and must fit inside a rectangular volume of 150 cm x 15 cm x 15 cm. You will store gravitational potential energy by raising your device to a point of your choice, but no point on your device may be more than 150 cm above the floor. You will hold it at the chosen point by a single string, then release the stored energy by releasing the string. You may not push your device.

You will also supply a “tee” to hold the golf ball above the “tee surface.” The “tee” may not itself impart any kinetic energy to the ball, or guide the direction of the ball.

Your ball must land in a “sand trap” target (actually filled with birdseed) that is 100 cm x 100 cm square. There is a 10.8 cm diameter hole in the centre of the sand trap. There is a backboard and sideboards on the sand trap.

The score for a shot is

$$S = \frac{D_{\text{tee-hole}}}{1\ \text{m} + D_{\text{ball-hole}} + P_{\text{floor}} + P_{\text{back-sides}}}$$

where $D_{\text{tee-hole}}$ is the initial distance from the tee to the hole, $D_{\text{ball-hole}}$ is the distance from the final ball position to the hole (zero if inside the hole), P_{floor} is a one meter penalty if the ball bounces one or more times before the sand trap, and $P_{\text{back-sides}}$ is a one meter penalty if the ball hits the backboard or sideboards one or more times. The score for the shot is zero if the ball does not stop in the sand trap.

The score for your team will be the maximum score obtained in 3 shots (including shots that do not stop in the sand trap). You may rest your tee at any point on the 100 cm x 100 cm area of floor vertically below the ceiling. You may choose the initial location of the sand trap relative to the tee, up to a maximum of 10 meters between the tee and the hole. You may relocate the sand trap one time. You may not relocate the tee position.

You will have 3 minutes to attach your device to the "ceiling," make your shots, and remove your device. We strongly encourage you to use hooks to attach to the screw eyes, rather than knots.

Neither your device nor your tee may damage the setup in any way.

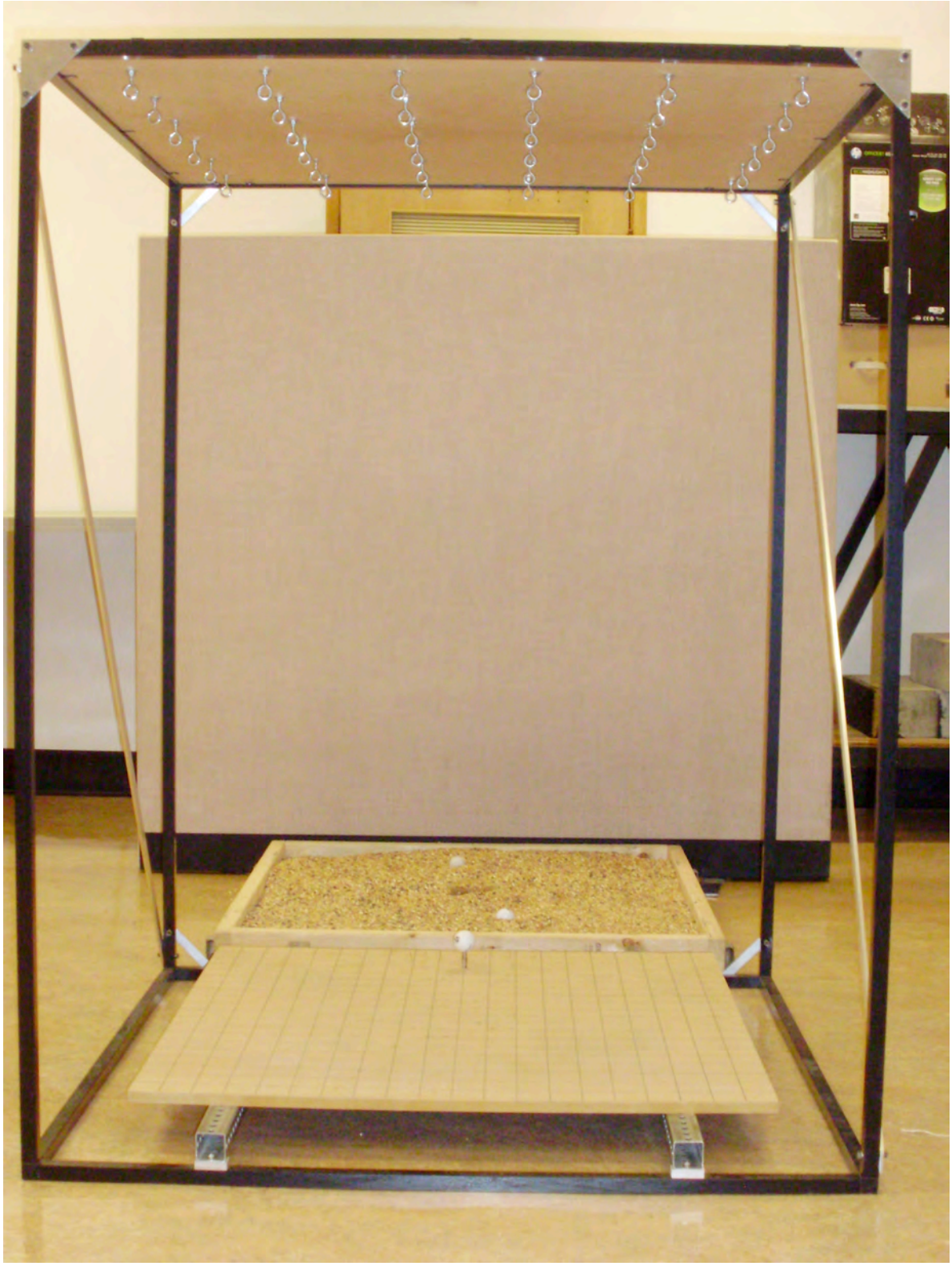

Figure 1: Gravity Golf setup. The sideboards and backboards of the “sand trap” have not yet been installed.

2. Mousetrap Dragster

The goal is to make a car driven by the energy of a mousetrap that traverses a drag strip in the shortest time.

The car must be propelled exclusively by wheels made from standard CDs or DVDs. The wheels must be driven exclusively by one Victor-brand mousetrap (46x98 mm, available at Safeway and other stores). The mousetrap trigger mechanism must be used to start the vehicle, and the mousetrap must not be disassembled or modified except as required for mounting to the car. The car must be a single unit no more than 40 cm long before, during, and after the race.

The drive wheel CD/DVDs may not be reduced in diameter, but modifications to increase traction are allowed provided the diameter is increased no more than 4 mm and the thickness no more than 2 mm. Non-drive wheels need not be made from CDs or DVDs. The car may not be constructed from a commercial kit.

The track is 4 meters long plus 40 cm long start and finish areas. It has a painted plywood surface and is 1 meter wide with 2x4 side walls. The start and finish times will be measured electronically by light beams close to the track surface. Cars which may damage the track will be disqualified.

Your score will be the fastest time obtained in two trials. You will have 3 minutes to do your trials. Cars which do not finish the race in either trial will be ranked by distance traveled.

Figure 2: Victor-brand mousetraps.

3. Fermi Questions

The great twentieth century physicist Enrico Fermi was famous for being able to estimate anything to within a factor of ten. Examples of "Fermi Questions" are:

- What is the total mass of the students competing in the Physics Olympics today?
- How many litres of gasoline are consumed in Greater Vancouver each year?
- How many molecules of air are there in this room?

For more examples, look on the web. These were taken from
http://www.physics.uwo.ca/science_olympics/events/puzzles/fermi_questions.html

Answering a Fermi question in physics requires common sense understanding, knowing the order of magnitude of key constants of nature and physical parameters, and the ability to do approximate calculations quickly.

Your team will be given a number of Fermi Questions to answer using only pencil and paper and your own knowledge. No calculators, computers, books, or notes are allowed. Since there will be a substantial number of questions to answer and only a limited time to answer them, speed and teamwork will be important. Your written answers will be graded for accuracy appropriate to the questions. Your answers must include appropriate units, in the SI (MKS) system.

Many physicists pride themselves on knowing various constants of nature and physical parameters to at least one decimal place. Parameters that may be needed, to this accuracy, include but are not limited to,

the speed of light
Planck's constant
Boltzmann's constant
Avagadro's number
the mass of the electron
the mass of the proton
the charge of the electron
the constant in Coulomb's Law
the constant in Newton's Law of Gravity
the acceleration of gravity on Earth
the radius of the Earth
the distance to the Sun

4. Light Ray Ricochet

Students will be required to apply their knowledge of reflection and refraction in order to direct a laser beam onto a target. Heats will be closed except to participating schools.

5. Mystery Event

Teams will solve a problem using knowledge of physics principles, logic, and/or experiment. Details of the problem and scoring scheme will be announced at the time of competition. To preserve the mystery, the heats will be closed to all persons except the participants.

6. Quizzics!

Team members will work together to answer questions about physics and astronomy. Questions may involve famous scientists, history of science, mechanics, waves, electricity and magnetism, fluids, and "modern" physics. Some questions may involve short calculations.

All teams will participate in the preliminary Quizzics! heats. Questions are in multiple-choice format and each team will answer using an electronic "clicker." Consultation between team members is allowed. The same questions will be used in each preliminary heat, so these heats are closed to all except participants.

The teams with the highest scores in the preliminary heats will meet in the public medal-round of Final Quizzics! using a buzzer system. The first team to buzz must answer the question. An incorrect answer (or failing to answer within 30 seconds) loses 5 points, and allows the other teams a chance to buzz to answer the same question. A correct answer is worth 5 points, plus a chance to answer a bonus question for 10 points.

THE THIRTY-SECOND UBC PHYSICS OLYMPICS RULE BOOK

March 6, 2010

Financial sponsorship is provided by the Rex Boughton Memorial Fund.

The UBC Physics Olympics is organized by the Department of Physics and Astronomy with assistance from the Department of Curriculum & Pedagogy (Science Education).

Version 2, 17 February 2010

General Rules

Each school may enter one team of students, which participates in all 6 events. A team may have a maximum of 10 registered students, of which at most 5 participate in a given event. Events are designed so undersized teams are not penalized. Each event is run in 6 heats lasting about 1 hour each, with approximately 10 schools participating in each heat. There is a break for lunch (not provided, but the Student Union Building is across the street from Hennings). Gold, Silver, and Bronze medals will be awarded to the members of the top teams in each event. A trophy will be awarded to the school sponsoring the team with the best combined score.

The combined score of a team is the sum of their decibel scores in the 6 events. The schools are sorted by score in each event, and the decibel score of each school is $\mathrm{dB} = 10 \times \log_{10}(\mathrm{rank})$. Thus a first place ranking in an event is 0 dB, second is 3.01 dB, fifth is 6.99 dB, tenth is 10 dB, twentieth is 13.01 dB. The overall winner is the school with the lowest total decibels.

Interpretation of Rules

Normal physical interpretations will be applied to all the terminology used in defining the challenges. Those solutions which, in the opinion of the event judges, do not comply with the spirit and intent of the challenge will be disqualified from the event (and thus ranked last). The ruling of the event judges is final.

Pre-Build Events

There are two events which require teams to design and build structures before the event. It is the responsibility of each team to package their structure for transportation to the competition without damage. Pre-built structures will be checked in on arrival and safely stored until required for a heat. Modifications are not allowed after arrival, except for repairs of damage sustained in transit.

The pre-built events are intended to be learning experiences for the students, so we ask that team coaches resist the urge to overly involve themselves in the design and construction.

Winning solutions will typically push up against the limits of the rules, but violating the rules will result in disqualification. To avoid this disappointment, teams are encouraged to contact the Physics Olympics organizers at any time for a preliminary evaluation about whether their design is within the rules. However, the ruling of the event judge about the legality of a pre-built structure at the time of the competition is final, and overrides any preliminary evaluation.

Please direct inquiries about the rules to Prof. Thomas Mattison, preferably by email to mattison@physics.ubc.ca or telephone 604-822-9690 (day) 604-224-3049 (evening).

1. Pendulum Golf

The goal is to build a pendulum device to drive a golf ball toward a hole, using only gravitational potential energy from the weight of your device.

Your pendulum device will be suspended from a 100 cm x 100 cm "ceiling" located 1.5 m above the "floor". The ceiling has 36 screw eyes on a 20 cm grid. You may use any number of strings and hooks to attach your device to the ceiling. Use of elastic strings will result in disqualification. Your device may have a mass of no more than 5 kg and must fit inside a rectangular volume of 150 cm x 15 cm x 15 cm. You will supply a "tee" to hold the golf ball above the floor. You may place your tee at any point on the 100 cm x 100 cm area of impenetrable floor vertically below the ceiling. The tee may not itself impart any kinetic energy to the ball, or guide the direction of the ball. You will store gravitational potential energy by raising your device to a point of your choice, but no point on your device may be more than 2 meters above the floor. You will hold it at the chosen point by a single string, then release the stored energy by releasing the string.

Your ball must land in a sand trap target that is 100 cm x 100 cm square, without rolling or bouncing first, and without bouncing or rolling out. There is a 10.8 cm diameter hole in the centre of the sand trap. You may choose the location of the sand trap relative to the tee, up to a maximum of 10 meters between the tee and the hole. The score for a shot is the distance in meters from the tee to the stopping point of the ball, divided by (1 meter plus the distance of the ball from the center of the hole in meters). The score is thus the distance from the tee to the hole if the ball ends up in the hole, and half the distance from the tee to the hole if the ball stops in the sand trap 1 meter from the hole. The score for your team will be the maximum score obtained in four shots. You will be allowed one "mulligan" for missing or rolling out of the sand trap. Between shots, the sand trap may be relocated, and minor adjustments to your device may be made, with the permission of the judge. The attachment of your device to the "ceiling," your four shots, and the complete removal of your device from the "ceiling," and removal of your "tee," must be accomplished in 4 minutes. We encourage you to use hooks to attach to the screw eyes, rather than knots.

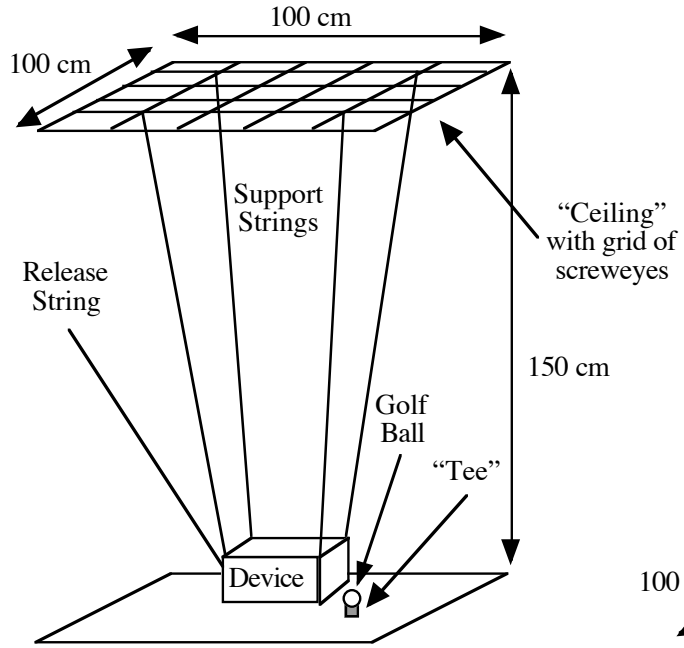

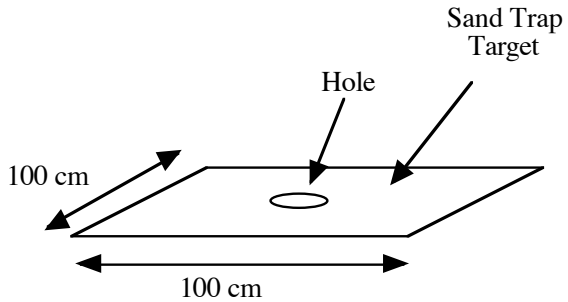

2. Water Power Boat Race

Your goal is to construct a racing boat, powered only by the gravitational potential energy of water. There is no limit on how much water "fuel" you may use, except that your boat must float stably throughout the race. Your boat may discharge water during the race, but no water may be added during the race. You may not use air or steam pressure, or any other form of stored energy, in your propulsion mechanism.

Your boat must fit within a rectangular region 25 cm wide, 40 cm long, and 100 cm high, at all times during the race. Your boat may not contact the bottom of the tank, which will be filled with water to a depth of 20 cm. Your boat may incidentally contact the walls of the tank, but you may not utilize the walls of the tank for propulsion.

The race course is 30 cm wide and 288 cm long, plus a 50 cm long preparation area. Your boat will be held the preparation area while you "fuel" it with water and otherwise prepare it to race. You will tell us when to release your boat, and we will measure the time it takes to reach the finish line. Your rank will be determined by the shortest time to complete the race. Boats not completing the race will rank behind those that do finish, with greatest distance traveled ranking highest. You will have 1 trial, which must be completed in less than 4 minutes including preparation time.

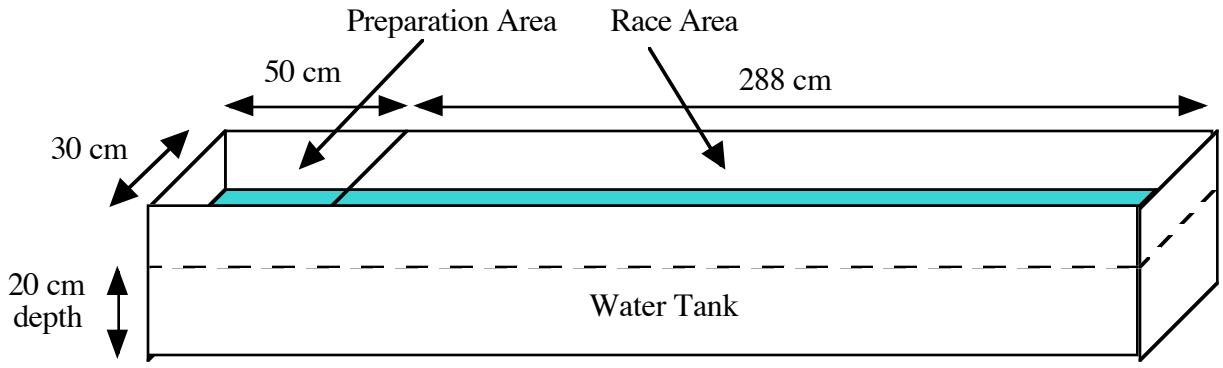

3. Fermi Questions

The great twentieth century physicist Enrico Fermi was famous for being able to estimate anything to within a factor of ten. Examples of "Fermi Questions" are:

- How much energy does a horse consume in its lifetime?
- How big does a seed on the ground have to be to justify a bird flying off a tree branch to eat it?
- What is the typical molecular binding energy?
- How small can a 1 GB memory be?

For more examples, look on the web. These were taken from
http://www.physics.uwo.ca/science_olympics/events/puzzles/fermi_questions.html

Answering a Fermi question in physics requires common sense understanding, knowing the order of magnitude of key constants of nature and physical parameters, and the ability to do approximate calculations quickly.

Your team will be given a number of Fermi Questions to answer using only pencil and paper and your own knowledge. No calculators, computers, books, or notes are allowed. Since there will be a substantial number of questions to answer and only a limited time to answer them, speed and teamwork will be important. Your written answers will be graded for accuracy appropriate to the questions. Your answers must include appropriate units, in the SI (MKS) system.

Many physicists pride themselves on knowing various constants of nature and physical parameters to at least one decimal place. Parameters that may be needed, to this accuracy, include but are not limited to,

the speed of light
Planck's constant
Boltzmann's constant
Avagadro's number
the mass of the electron
the mass of the proton
the charge of the electron
the constant in Coulomb's Law
the constant in Newton's Law of Gravity
the acceleration of gravity on Earth
the radius of the Earth
the distance to the Sun

4. Inukshuk Construction

Your team will compete to construct Inukshuks that maximize some specified properties, using sets of wooden blocks which will be provided. Your Inukshuks must balance and be free-standing, so a good understanding of Centre of Mass will be essential.

There will be 3 different projects to be constructed, and the blocks used will vary in size and mass distribution from project to project. Your team's score will be a weighted sum of the values of the specified properties for the 3 projects. Any ties will be broken using the minimum value of the total construction time.

5. Mystery Event

Teams will solve a problem using knowledge of physics principles, logic, and/or experiment. Details of the problem and scoring scheme will be announced at the time of competition. To preserve the mystery, the heats will be closed to all persons except the participants.

6. Quizzics!

Team members will work together to answer questions about physics and astronomy. Questions may involve famous scientists, history of science, mechanics, waves, electricity and magnetism, fluids, and "modern" physics. Some questions may involve short calculations.

All teams will participate in the preliminary Quizzics! heats. Questions are in multiple-choice format and each team will answer using an electronic "clicker." Consultation between team members is allowed. The same questions will be used in each preliminary heat, so these heats are closed to all except participants. The three teams with the highest scores in the preliminary heats will meet in the public medal-round of Final Quizzics!

In Final Quizzics! the first person to buzz must answer for her team without consultation. An incorrect answer (or failing to promptly answer after buzzing) loses 5 team points, and allows the next team to buzz a chance to answer the same question (also without consultation). Correct answers score 5 team points, and a chance for the team to answer a 10 point bonus question (with 1 minute for consultation).

THE THIRTIETH-FIRST UBC PHYSICS OLYMPICS RULE BOOK

March 7, 2009

Financial sponsorship is provided by the Rex Boughton Memorial Fund.

The UBC Physics Olympics is organized by the Department of Physics and Astronomy with assistance from the Department of Curriculum & Pedagogy (Science Education).

Version 1, 11 February 2009

General Rules

Each school may enter one team of students, which participates in all 6 events. A team may have a maximum of 10 registered students, of which at most 5 participate in a given event. Events are designed so undersized teams are not penalized. Each event is run in 6 heats lasting about 1 hour each, with approximately 10 schools participating in each heat. There is a break for lunch (not provided, but the Student Union Building is across the street from Hennings). Gold, Silver, and Bronze medals will be awarded to the members of the top teams in each event. A trophy will be awarded to the school sponsoring the team with the best combined score.

The combined score of a team is the sum of their decibel scores in the 6 events. The schools are sorted by score in each event, and the decibel score of each school is $\mathrm{dB} = 10 \times \log_{10}(\mathrm{rank})$. Thus a first place ranking in an event is 0 dB, second is 3.01 dB, fifth is 6.99 dB, tenth is 10 dB, twentieth is 13.01 dB. The overall winner is the school with the lowest total decibels.

Interpretation of Rules

Normal physical interpretations will be applied to all the terminology used in defining the challenges. Those solutions which, in the opinion of the event judges, do not comply with the spirit and intent of the challenge will be disqualified from the event (and thus ranked last). The ruling of the event judges is final.

Pre-Built Events

There are two events which require teams to design and build structures before the event. It is the responsibility of each team to package their structure for transportation to the competition without damage. Pre-built structures will be checked in on arrival and safely stored until required for a heat. Modifications are not allowed after arrival, except repairs for damage in transit.

The pre-built events are intended to be learning experiences for the students, so we ask that team coaches resist the urge to overly involve themselves in the design and construction.

Winning solutions will typically push up against the limits of the rules, but violating the rules will result in disqualification. To avoid this disappointment, teams are encouraged to contact the Physics Olympics organizers at any time for a preliminary evaluation about whether their design is within the rules. However, the ruling of the event judge about the legality of a pre-built structure at the time of the competition is final, and overrides any preliminary evaluation.

Please direct inquiries about the rules to Prof. Thomas Mattison, preferably by email to mattison@physics.ubc.ca or telephone 604-882-9690 (day) 604-224-3049 (evening).

White Bridge

Design and build the lightest bridge with a horizontal free span of 50 cm that can support a load of 5 kg at mid-span, using only white paper, cotton string/thread, and water-based glue

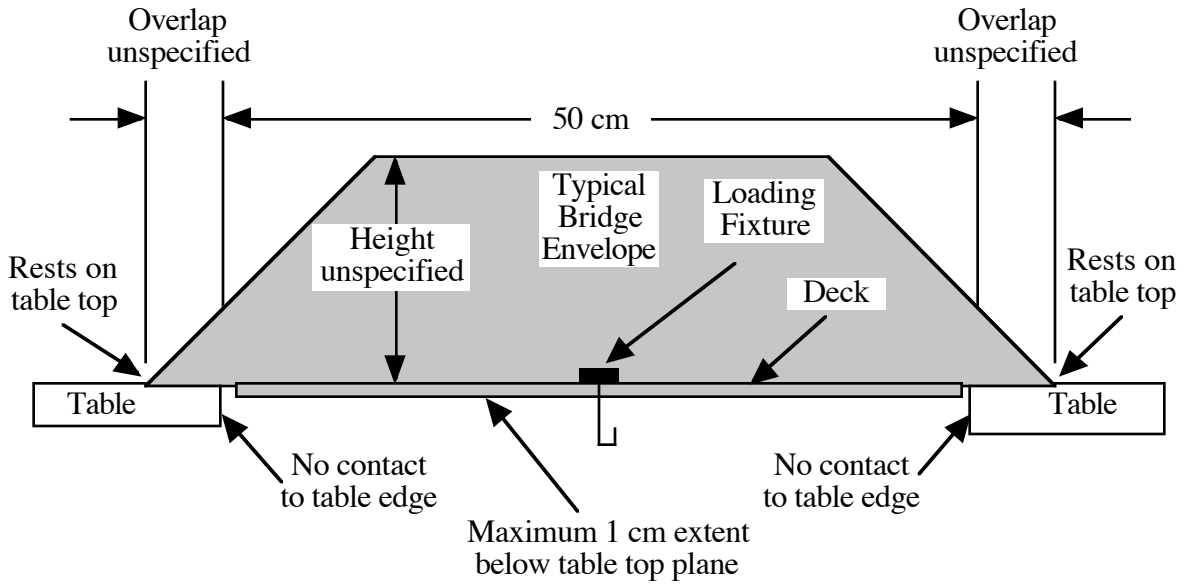

No wood, metal, plastic, cloth, fiberglass, carbon-fiber, nylon, kevlar, or other material except 20 lb white copier paper, white cotton string or thread, or white or clear water-based glue (e.g. Elmer's) may be used. To facilitate inspection of materials, the bridge may not be painted or decorated.

The bridge must contact only the top surfaces of the support tables on either side, and apply only vertical forces. The bridge may not be anchored to either support table except by gravity. The bridge may not contact any other surface of the support tables, or the floor, ceiling, walls, or other object. Note that the total length of the bridge will necessarily be more than 50 cm. The deck must have a 1 cm diameter hole in the center at mid-span for the loading fixture that we supply, which is a 5 cm by 5 cm block with a hook underneath. To facilitate the load test, the bridge structure must not extend more than 1 cm below the plane of the support tables.

The bridge must have a continuous horizontal deck at least 5 cm wide, able to support a 5 cm wide, 5 cm long, 2 cm tall aluminum deck-verification block (135 grams) pulled slowly across the 50 cm span by a string. Note that the deck may require side walls to guide the verification block.

You will first pull the deck-verification block slowly from one support table to the other with a string (the bridge may be anchored manually at one end during this test). You will then insert the loading fixture that we supply into the deck and attach test weights that we supply. A weight must be supported for 60 seconds with a deflection of less than 1 cm. The first test weight will be 2 kg (including loading fixture), and the second test weight will be 5 kg (including loading fixture). A total of 5 minutes is allowed for deck verification and load testing.

The ranking is: bridges that support 5 kg (lightest first), bridges that support 2 kg (lightest first), bridges that pass only deck verification (lightest first), and all other bridges (lightest first).

Efficient Electromagnet

Design and build a battery-powered electromagnet, and a weight for it to support, with the largest ratio of weight supported to weight of the electromagnet (including the batteries, holder, and switch).

For scoring, the electromagnet will be placed on top of a 1.2 mm thick horizontal plastic sheet (the thickness of a CD). The weight will be put in contact with the plastic sheet from below. No direct mechanical or electrical contact between the magnet and weight is allowed. The weight must be supported for 10 seconds, then released by turning off the electromagnet. Three trials with different amounts of weight may be attempted, and batteries may be changed between trials. A total of 5 minutes is allowed for setup and all trials. The score will be the ratio of largest weight supported to weight of electromagnet plus batteries.

The electromagnet, battery holder, and weight must be designed and built by the students, not purchased as a unit or kit. The construction and/or decoration of the electromagnet, battery holder, and weight must allow inspection to ensure that the rules have been followed. The electromagnet and weight must fit within a cylinder of diameter 100 mm. The length of the weight (including any added weights) must be less than 50 cm. The magnet, battery, and weight combined may be at most 5 kg. No permanent magnetic materials (except for unavoidable remnant magnetization) may be employed in either the electromagnet or the weight. Power must be provided exclusively by AAA, AA, C, or D size non-rechargable consumer-labelled alkaline flashlight batteries. Total voltage must be less than 30 volts. Lithium, nickel-cadmium, or nickel-metal-hydride batteries may not be used, from any source. No parts of the magnet or batteries may exceed a temperature of 50°C at any time during or after a 10 second run. Caution and a fire extinguisher is recommended during testing!

Mystery Event

Teams will solve a problem using knowledge of physics principles, logic, and/or experiment. Details of the problem and scoring scheme will be announced at the time of competition. To preserve the mystery, the heats are closed to all except participants.

Experimental Triathlon

Teams attempt 3 challenges, in which they answer a multiple-choice question that requires an experimental measurement. The winning team is the one that answers the questions in the least total time, with a 300 second penalty for each incorrect answer.

Unreal Physics

This event will require the team to operate a computer simulation based on principles of physics. It may require design and simulated construction of a configuration of components that satisfies some design criterion within some constraints. It may require performing some task in a simulated situation in real time for the highest score or fastest time. It may require ... nearly anything! After all, it's unreal!

Quizzics!

Team members will work together to answer questions about physics and astronomy. Questions may involve famous scientists, history of science, mechanics, waves, electricity and magnetism, fluids, and "modern" physics. Some questions may involve short calculations.

All teams will participate in the preliminary Quizzics! heats. Questions are in multiple-choice format and each team will answer using an electronic "clicker." Consultation between team members is allowed. The same questions will be used in each preliminary heat, so these heats are closed to all except participants. The three teams with the highest scores in the preliminary heats will meet in the public medal-round of Final Quizzics!

In Final Quizzics! the first person to buzz gets to answer for her team without consultation. An incorrect answer (or failing to promptly answer after buzzing) loses 5 team points, and allows the next team to buzz a chance to answer the same question (also without consultation). Correct answers score 5 team points, and a chance for the team to answer a 10 point bonus question (with 1 minute for consultation).

THE THIRTIETH

UBC PHYSICS OLYMPICS

RULE BOOK

March 8, 2008

Financial sponsorship is provided by the Rex Boughton Memorial Fund.

The UBC Physics Olympics is organized by the Department of Curriculum Studies (Mathematics and Science Education) and the Department of Physics and Astronomy.

In the Spirit of Physics

The wording of each challenge in this year's rule book has been carefully prepared to define each task as precisely as possible. It is expected that all participants will produce solutions which comply with the task as defined. Normal physical interpretations will be applied to all the terminology used in defining the tasks. Those solutions which, in the opinion of the judges, do not comply with the spirit and intent of the challenge, will be disqualified. General questions regarding the challenges may be directed to the coordinators of the Olympics. The coordinators will accept inquiries which may help them to prepare for unusually good solutions to the problem.

Please direct all inquiries regarding the rules to K. Schleich or D. Witt, preferably via email to schleich@noether.physics.ubc.ca or by phone to (604) 822-6286. This rule book and any clarifications will also be available on the world wide web at

http://noether.physics.ubc.ca/.

General Rules

Each school may enter one official team made up of a maximum of 10 members, of which a maximum of 5 participate in each event. Gold, silver and bronze medals will be awarded to the official teams scoring the highest, second highest and third highest aggregate scores. In addition, gold, silver and bronze medals will be awarded to the official teams scoring the highest, second highest and third highest aggregate scores. All teams must enter all events. The events are scheduled so that it is possible for all teams to enter all events. All ties will be broken. A trophy will be awarded to the school sponsoring the official team achieving the highest aggregate score.

TWO of the events require a pre-built structure. These entries must be checked in at the time of registration on the morning of the competition at which time they will be stored in a safe place until the time of the event.

Our Special Thanks to

Allen Wootton	Darren Peets	Simon Forman	Matt Scholte
Donna Leung	Michael Lindstrom	Alan Robinson	Amira Eltony
Don Witt	Edmund Tan	Joss Ives	

and to

Dr. Jeff Young Head, UBC Department of Physics and Astronomy and all students of the Physics and Physics Engineering program who assist in the design organization and running of this Physics Olympics.

The Looney Car (BC's Best Driver)

This is a pre-built event which involves the design of a car that utilises the energy stored in three rubber bands to cover a 5.0 m course as quickly as possible while completing a legal right turn and then parking.

Apparatus:

1. The total energy for moving the car can only come from the elastic potential energy stored in at most three size #32 rubber bands 3" x 1/8" (76 mm x 3.2 mm x 1.1mm). The three rubber bands will be supplied by the event organisers. They can be utilised in any way and do not have to remain in original condition. They do not need to be returned to event organisers.

2. The car must be constructed by the contestants themselves and may not consist mainly or exclusively of any sort of pre-purchased model kit or device. The car's mass must be less than or equal to 2 kg and its length in any direction must be no more than 0.50 m at all times.

3. The car must have a 5 cm by 5 cm square rigid flag placed parallel to the direction of travel whose bottom edge is situated at a height of 10 cm from the floor and whose front edge is even with the foremost part of the car. This flag must be directly attached to a rigid vertical flagpole or other rigid vertical piece of the car. This flag must remain attached in this manner at all times. Note that flag placement is important as it is used to time the car.

The Event

The car will move on an "L" shaped track marked on a linoleum floor. This track will be 5.0 meters long as measured along the inner edge of the L, and the bend in the L will be at 3.0 meters. The track will have three marked lanes, each 30 cm wide.

Behind the starting line there will be an area of about 1 meter in length for set-up of the car.

Immediately beyond the finish line there will be a parking area consisting of three stalls, each 30 cm wide and 50 cm long.

A successful car will start from rest at the starting line, travel down the track, turn 90 degrees, and stop in the parking area.

Rules: The rules for the event are as follows:

1. To begin a run, the car must be placed at the starting line with no part extending beyond this line. When the event organizers indicate to do so, a team member releases the car. No external intervention is allowed after the release of the car.

2. The car must remain in contact with the ground at all times. All parts of the car must remain on the track at all times. All parts of the car must cross the finish line and subsequently park in

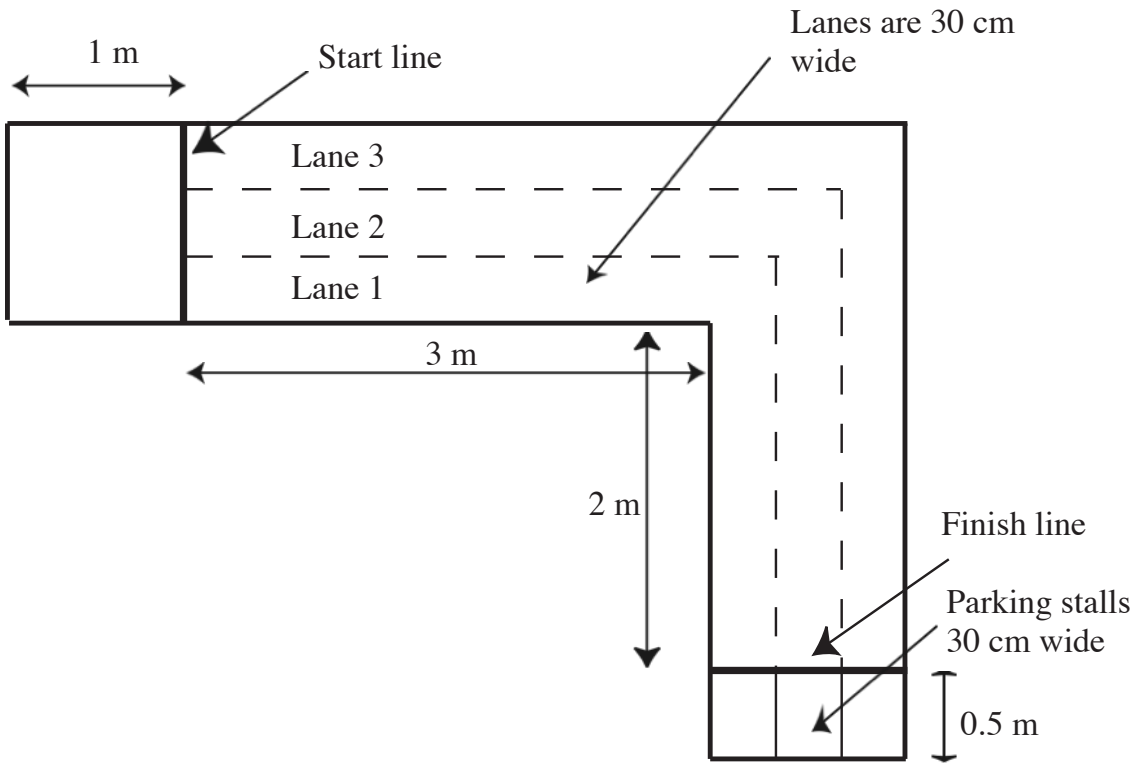

Figure 1: Diagram of the Race Track

the parking area. In particular, note that no material or substance can be left behind the car at any point during the run.

3. The timer will start when the flag on the car crosses the starting line and will stop when the flag crosses the finish line. If the car does not cross the finish line in 30 seconds, the run will be declared over (See rule 5). The car must then park (come to a complete stop in a parking stall) within an additional 15 seconds. A team member may stop a car that completely overshoots the parking stalls.

4. The score for a trial run is given by the formula Score = Lx(T +(D-50)/10) where T is the time taken for your car to traverse the track from the starting line to the finish line, L is the lane number of the lane farthest from the inner edge of the track that your car either partially or fully entered during the run and D is the distance from the frontmost point of your car to the front of the parking stall in centimeters. A car that partially crosses the finish line is penalized by this scoring formula; as long as the clock is stopped by the car, this formula will be used to calculate the score. The winning car will be the car with the lowest score.

5. If the car does not cross the finish line in 30 seconds, a time T = 10 + 150 / x (x is the distance in meters traveled by the car) and a D of 100 will be used in calculating the score. The distance x will be the shortest distance from the front edge of the flag to the starting line. The score

calculated in this manner will be higher than that of any finishing car; that is, all cars that cross the finish line will place above a car that does not.

6. If any part of the car exits the track before crossing the finish line, the score will be calculated as in rule 5, where x will now be the shortest distance from the exit point to the starting line. If a car crosses the finish line but does not park in the additional 15 seconds or if a car fully exits the parking area without stopping, the score will be calculated using a D of 100.

7. Teams will be allowed two trials. A total time of 6 minutes is allowed for the setup and running of the two trials. The best score attained in the two trials will be used as the team score. In the event of a tie, the second score will be used to resolve the tie.

Quizzics

A game show in which teams compete against each other to demonstrate general physics and astronomy knowledge.

Rules:

1. Each game will consist of two rounds of competition. Each team member will receive a PRS clicker (An electronic entry device similar to a TV remote) for use in answering the questions.

2. First round:
   a. Teams will be tested on a set of randomly chosen questions. Questions will be in multiple-choice format, testing general knowledge of physics and astronomy ranging from famous physicists and discoveries to mechanics, waves, fluids, electromagnetism and quantum physics.
   b. All 5 team members will be required to answer each of these questions individually. Each team member will input his/her own answer using the PRS clicker. The team score will be the sum of the number of correct answers made by all team members.
   c. Teams found to be communicating answers between members during the first round will be disqualified.

3. Second round:
   a. Questions will be in both multiple-choice and single-answer format and may require simple calculations or more detailed knowledge.
   b. The 5 team members are allowed to consult with each other during the second round. Only one answer will be submitted per team in the second round. The team score for this round will be 5 times the number of correct answers.

4. The total score will be given by the sum of the team scores from both rounds. Ties will be broken by short set of extra challenge questions.

5. The top 6 teams overall will meet in a final game of Quizzics to determine first through sixth place. The other places will be will be awarded in accordance with the total scores.

Intuitive Physics

Each team will be presented with simple experiments or simulations based on basic principles of mechanics, electricity and/or magnetism. Teams will be required to provide answers to questions based on these experiments or simulations. Answers to questions may involve simple calculations. The team with the most correct answers will win. Quality of answers involving explanations will be used to resolve ties.

Boat Race

The object of this in-house event is to construct a boat out of mystery materials provided by the event organizers on the day of the event to sail on the racecourse described below.

1. The boat must be constructed only from the mystery materials supplied on the day of the event by the event organizers.

2. The boat must have a maximum width of 4" at its widest point, and a maximum length of 8" at its longest point. The boat must be designed to carry out all tasks (such as carrying provided cargo) that will be specified by the event organizers.

3. Contestants will have 15 minutes to design and build their boat. Contestants will be able to test their designs using the Racecourse during this period.

Racecourse:

The course will consist of an 8 foot long by 3 feet wide by five inch deep trough filled with water. The starting gate will be placed 10 inches from one end of the trough and the finish gate will be placed 10 inches from the other end.

Racing and Scoring:

1. The boat will be released from the end of the trough nearest the starting gate. The boat may not push off from the sides, back or bottom of the trough or from the person launching it. The person launching it must release the boat without providing it any force.

2. The boat may hit the sides of the trough or take on water without disqualification, but all parts of the boat must finish together.

3. The winning boat will be the one that finishes the course in the manner specified by the organizers on race day.

Mystery Event

This event will involve solving a simple experimentally oriented problem or problems using logic and knowledge of basic principles of physics.

Multimeter Project

This is a pre-built event in which participants must design and build a multimeter with which to measure DC current, voltage and resistance.

Materials:

The only materials that may be used in construction of the multimeter are:

* wood
* nails
* wire
* magnets
* resistors
* potentiometers
* batteries
* common household materials

Note: scavenged meter movements, transistors and integrated circuits are specifically excluded.

The multimeter should be able to measure current up to 100 mA, voltages to 20 V and resistance to 10 kΩ.

The meter must be constructed by the contestants themselves and may not consist mainly or exclusively of any sort of pre-purchased model kit or device.

Event:

Each team will be provided with
(a) a complete circuit consisting of resistors and a battery and,
(b) two resistors.
The team will have 10 minutes in which to measure one current and one voltage for the circuit and to determine the resistances of the two resistors.

Rules:

1. The multimeter must be equipped with test leads that may use alligator clips or bare wire ends to connect the meter to the circuit or to the resistors.

2. The multimeter (excluding test leads) must be able to fit into a bounding box of dimensions 30 cm by 30 cm by 30 cm at all times during the event.

3. Each team will have ten minutes (the trial period) to complete their measurements. Prior to the trial period, judges will distribute circuits and resistors to all the competing teams. The trial period will begin at the time indicated by the judge.

4. Teams are to record their results on the form provided.

5. The score will be based on the accuracy of the results. In the event of a tie, the time required to make the measurements will determine the winner.

6. After the trial has ended, the team must quickly return the circuit and resistors to the judges. The circuit and resistors must be in their original condition. If either the circuit or resistors are damaged, the team will be disqualified. If your multimeter design potentially places a current through the circuit during the voltage or current measurement, please contact the event organizers for further specifications.

THE TWENTY NINTH

UBC PHYSICS OLYMPICS

RULE BOOK

March 10, 2007

Financial sponsorship is provided by the Rex Boughton Memorial Fund.

The UBC Physics Olympics is organized by the Department of Curriculum Studies (Mathematics and Science Education) and the Department of Physics and Astronomy.

In the Spirit of Physics

The wording of each challenge in this year's rule book has been carefully prepared to define each task as precisely as possible. It is expected that all participants will produce solutions which comply with the task as defined. Normal physical interpretations will be applied to all the terminology used in defining the tasks. Those solutions which, in the opinion of the judges, do not comply with the spirit and intent of the challenge, will be disqualified. General questions regarding the challenges may be directed to the coordinators of the Olympics. The coordinators will accept inquiries which may help them to prepare for unusually good solutions to the problem.

Please direct all inquiries regarding the rules to K. Schleich or D. Witt at preferably via email to schleich@noether.physics.ubc.ca or by phone to (604) 822-6286. This rule book and any clarifications will also be available on the world wide web at http://noether.physics.ubc.ca/.

General Rules

Each school may enter one official team made up of a maximum of 10 members, of which a maximum of 5 participate in each event. Gold, silver and bronze medals will be awarded to the official teams scoring the highest, second highest and third highest aggregate scores. In addition, gold, silver and bronze medals will be awarded to the official teams scoring the highest, second highest and third highest aggregate scores. All teams must enter all events. The events are scheduled so that it is possible for all teams to enter all events. All ties will be broken. A trophy will be awarded to the school sponsoring the official team achieving the highest aggregate score.

TWO of the events require a pre-built structure. These entries must be checked in at the time of registration on the morning of the competition at which time they will be stored in a safe place until the time of the event.

Our Special Thanks to

Don Witt Alan Robinson Frank Zhang Darren Peets
Laura Dunwoody Edward Quinlan Parmveer Atwal Robert Uno
James Tung Tyler Dodds

and to

Dr.Jeff Young Head, UBC Department of Physics and Astronomy

and all students of the Physics and Physics Engineering program who assist in the design organization and running of this Physics Olympics.

Hydromatic Lifter

BC Hydro is looking for new efficient designs to extract energy from resources that produce no greenhouse gases. The lifter should be able to do the most work possible (lifting a mass) using only the potential energy released by 2 litres of water falling in a waterfall of a maximum height of .75 meter. The lifter should be infinitely reusable without maintenance.

Apparatus:

1. The apparatus for this event consists of three parts, all supplied by the contestants: the waterfall the lifter and the mass.

2. The waterfall consists of a source (where all water is put at the beginning of the trial) a catch-basin (where all water is collected after a trial and a run (where the water flows during the trial). Note that the run need not be physical; water can be allowed to freely fall between the source and the catch-basin.

3. The top of the water level in the source at the start of the trial must be no more than .75 meter above the lowest point of the catch-basin.

4. The waterfall must be designed to catch all of the water in the catch-basin. It must also be designed so that all of the water collected in the catch-basin can be easily poured by the contestants into a bucket.

5. The lifter must be separate and independent of the waterfall. In particular it can hold no water either at the beginning or end of the trial; i.e. it cannot be part of either the source or the catch-basin.

6. The mass must be specified to the judges to contestants at the beginning of the trial. The mass must be a single solid and rigid object of dimensions less than 20 by 20 by 20 cm. It must be connected to the lifter by thin string, wire, fishing line or other essentially massless material.

7. The apparatus must be designed so that at the end of the trial, the mass is held into its final elevated position for measurement by the judges.

8. The entire apparatus (all three parts) must fit in a 1 by 1 by 1 m box at all times.

9. The apparatus must be constructed entirely by the contestants themselves and should not consist mainly or exclusively of any sort of pre-purchased device.

Rules:

1. Teams will have a total of 5 minutes to set up and run a trial. Only one trial will be allowed.

2. At the beginning of the trial, organizers will provide contestants with a 2 liter pop bottle filled with UBC tap water. The only source of energy for lifting the mass must be provided by the potential energy of the supplied water falling a maximum distance of .75 meter.

3. During set up, contestance can place the provided water in the source as desired. At the start of a trial, the team will start the flow of water when directed to by the event organizers. The trial will end when either all water has flowed from the source to the catch-basin or 3 minutes after the start of the trial.

4. No external human intervention is allowed after the start of the trial.

5. The final configuration of the apparatus must be the same as that of the initial configuation except for water having moved from source to catch-basin and elevation of the mass. In particular, no part of the apparatus is allowed to transfer stored energy to lift the mass.

6. The winning team will do the most work done on the mass using the energy released by the falling water. This work will be computed from using height as measured by the vertical displacement from the lowest point of the mass before the trial to the lowest point after the trial.

The Electrical Maze

This event will require teams to race to solve an electrical maze.

Materials: The following equipment will be provided:

multimeters
paper
ruler

Rules:

1. Contestants are not allowed to bring or use any materials or equipment other than those provided with the exception of calculators and pens or pencils for writing.

2. Teams will be given a DC power supply and a small subcircuit containing one or more light emitting diodes and a circuit with some or all of the following components: resistors, capacitors, switches and diodes. The components may not necessarily be visually identifiable to the contestants; it may be necessary to identify them using their properties and the provided equipment. Recall that a diode is a component which allows the passage of current in only one direction. A capacitor is a charge storage device with the property that it does not allow the passage of DC current. A switch is a device that allows current to pass in both directions when closed, and does not allow current to pass when open. A resistor have a relationship between V and I that follows Ohm's law.

3. Each team will be expected to find a path through the circuit that will provide a specified voltage and current to the small subcircuit. Successful completion of this task will cause the light emitting diode or diodes to perform in some specified manner. This path will be made by opening and closing switches. Each team will also be expected to draw a circuit diagram of the entire maze and provide other required information about the circuit. These diagrams will be turned in when the team has successfully solved the maze and will be used in the scoring.

4. Each team will be awarded a time based on the time that their circuit diagram is turned in to the event organizers. The winners of the event will be determined by the least time taken in finding a correct solution.

Mystery Event

This event will involve solving a simple experimentally oriented problem or problems using logic and knowledge of basic principles of physics.

Intuitive Physics

Each team will be presented with simple experiments or simulations based on basic principles of mechanics, electricity and/or magnetism. Teams will be required to provide answers to questions based on these experiments or simulations. Answers to questions may involve simple calculations. The team with the most correct answers will win. Quality of answers involving explanations will be used to resolve ties.

Optical Target Practice

The goal of this event is to direct light beam through optical elements to a hit a target. The optical obstacle course will contain optical objects such as lenses, prisms, plane mirrors and other transparent objects with specified indexes of refraction. Some course elements will be fixed and some will be movable.

To prepare for this event, contestants should be able to use Snell's law, and the law of reflection, the lensmakers equation ($1/s + 1/s' = 1/f$) and understand magnification. Contestants should bring a non-programmable calculator, pencil, protractor, and a ruler.

Rules:

1. Students may not move any of the fixed course components. One fixed course component will be the light source. Other components that are fixed will be specified at the time of the event.

2. The beam may be required to pass through certain fixed course components for a successful completion of the event. These components will be specified at the time of the event.

3. A maximum of fifteen minutes will be allowed for each team to set up the movable objects in the course. No movable course objects may be placed outside of the designated course boundaries. Only the equipment provided may be used.

4. No trial runs are permitted. The light source will be turned on by one of the event coordinators after the students' set-up is complete. (Alternately, at the end of the allotted time if this comes before the contestants have fully completed their set-up).

5. Score will be based on accuracy at hitting the target in the specified manner with severe penalties if beam path misses the required fixed course components. Time spent in solving the course will be used to resolve any ties with shorter time being better.

Rescue Submarine

A submarine has been lost at sea. Time is of the essence. Deploy a rescue submarine to dive, pick-up survivors, and bring them to the surface. Your submarine must bring as much payload as possible off the sea floor and float it to the surface.

The Test Basin

1. The submarines will be tested in a sea of depth 40 cm.

2. The sea has a diameter of at least 25 cm and it will be filled with room temperature UBC tap water. The sea is surrounded by nonmetallic and nonmagnetic land (the container).

3. The survivors consist of 200 g of 2 1/4 inch bright common nails (type 7d) located in a circular area of roughly diameter 15 cm.

The Apparatus

1. The apparatus consists of two parts: the submarine and the ballast. The apparatus must be entirely self contained, with no external connections or power source. The submarine will retrieve and return passengers to the surface. The ballast can be left on the bottom. The apparatus design must have a submarine but is not required to have ballast. Contestants must specify these parts to event organizers before the trial.

2. If used, ballast must consist of no more than 2 solid pieces of insoluable material or water. If using water, the design must use tap water provided by event organizers. The mass of this water will be counted as ballast.

3. The submarine must fit into a sphere of 15 cm diameter at all times during the trial. Ballast must fit into the submarine until it is within a distance of 10 cm from the sea bottom. When ballast is dropped it must competely separate instantaneously.

4. This is an environmentally friendly submarine. The operation of the apparatus must not contaminate or evaporate the sea or damage the land (the container) or survivors. In particular, there shall be no dissolving or decomposing parts to the submarine or ballast.

5. Any dropped ballast must be easily recoverable.

6. The device must be constructed entirely by the contestants themselves and should not consist mainly or exclusively of any sort of pre-purchased device.

Testing

1. Teams will have 5 minutes to deploy and test their submarines. Repeat, time is of the essence.

2. At the start of a trial, the team will begin the dive when directed to by the event organizers. No external human intervention is allowed after the start of the trial. Only one trial is allowed.

3. The apparatus must freely dive to the bottom of the sea, retrieve as many survivors as possible, and return to the surface, all without touching land at any time (i.e. the sides of the container). Touching the sea floor (ie. the bottom of the container) during the operation is allowed.

4. At the end of the trial, the submarine must breach the surface and remain on the surface with some part of its structure above the surface for 30 seconds in order to score. The survivors brought up in or on the submarine present after this time will be part of the score.

Scoring

The winning submarine will recover the most survivors using the least mass of ballast. In the unlikely event of a tie, the submarine that is quickest at rescuing the survivors will win.

Good luck, and Godspeed.

THE TWENTY EIGHTH

UBC PHYSICS OLYMPICS

RULE BOOK

March 4, 2006

Financial sponsorship is provided by the Rex Boughton Memorial Fund.

The UBC Physics Olympics is organized by the Department of Curriculum Studies (Mathematics and Science Education) and the Department of Physics and Astronomy.

In the Spirit of Physics

The wording of each challenge in this year's rule book has been carefully prepared to define each task as precisely as possible. It is expected that all participants will produce solutions which comply with the task as defined. Normal physical interpretations will be applied to all the terminology used in defining the tasks. Those solutions which, in the opinion of the judges, do not comply with the spirit and intent of the challenge, will be disqualified. General questions regarding the challenges may be directed to the coordinators of the Olympics. The coordinators will accept inquiries which may help them to prepare for unusually good solutions to the problem.

Please direct all inquiries regarding the rules to K. Schleich or D. Witt at preferably via email to schleich@noether.physics.ubc.ca or by phone to (604) 822-6286. This rule book and any clarifications will also be available on the world wide web at http://noether.physics.ubc.ca/.

General Rules

Each school may enter one official team made up of a maximum of 10 members, of which a maximum of 5 participate in each event. Gold, silver and bronze medals will be awarded to the official teams scoring the highest, second highest and third highest aggregate scores. In addition, gold, silver and bronze medals will be awarded to the official teams scoring the highest, second highest and third highest aggregate scores. All teams must enter all events. The events are scheduled so that it is possible for all teams to enter all events. All ties will be broken. A trophy will be awarded to the school sponsoring the official team achieving the highest aggregate score.

TWO of the events require a pre-built structure. These entries must be checked in at the time of registration on the morning of the competition at which time they will be stored in a safe place until the time of the event.

Our Special Thanks to

Don Witt	Darren Peets	Will Chao	Ana Pop. Jr.
Christina Pop	Tom Wu	Amanda Degenhardt	Ivan Chan
Johathan Fraser	Carole Yuen		

and to

Dr.Jeff Young Head, UBC Department of Physics and Astronomy

and all students of the Physics and Physics Engineering program who assist in the design organization and running of this Physics Olympics.

Do…You…Want…To…Play…A…Game?

This is a pre-built event that involves the design of a cart that utilizes the energy produced by a falling 1 kilogram mass to cover a 3 meter track as quickly as possible while accurately launching a projectile using the energy stored in two rubber bands onto a target 1.25 meters to one side along the way**.**

Apparatus: The apparatus consists of three parts: the cart, the launcher and the projectile. The part of the apparatus that will be measured for time is called the cart. The part of the apparatus that will be launched and measured for accuracy is called the projectile. The launcher is the part of the apparatus that launches the projectile. The launcher must be permanently attached to the cart. The three parts must be designated by the contestants before the beginning of the trial runs.

1. The total energy for moving the cart can **only** come from the energy produced by one 1 kilogram mass falling a maximum vertical distance of 50cm. The mass must be released from rest. The 1 kilogram mass will be supplied by the event organizers. It must be mounted on or utilized by the apparatus without altering it in any way and returned undamaged to event organizers at the end of the event. Note that if the mass is to be attached to the cart, **it must be attached by string or fishing line** in order to satisfy the requirements of this rule.

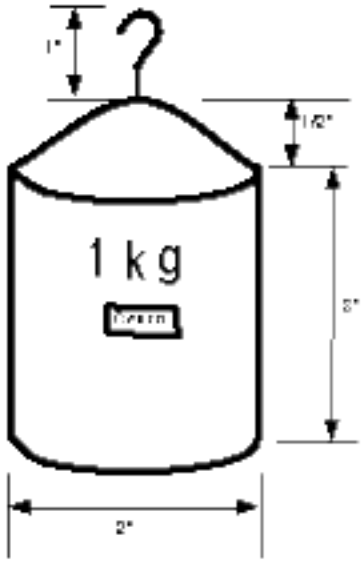

Front View of 1 Kilogram Mass

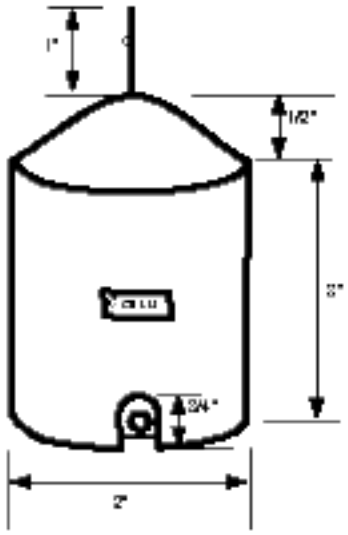

Side View of 1 Kilogram Mass

2. The total energy for moving the projectile can **only** come from two Dixon Star #32 rubber bands 3” x 1/8” (76 mm x 3.2 mm x .8 mm). The two rubber bands will be supplied by the event organizers. They can be utilized in any way and do not have to remain in original condition. They do not need to be returned to event organizers.

3. Observe that rules 1 and 2 do not preclude contestants from using small amounts of stored energy to trigger the launch of the projectile.

4. The cart and launcher together must have a maximum length, width and height of no more than 65 cm at all times.

5. The projectile must be a single black colored object with a maximum length, width and height of no more than 5 cm at all times. It must be completely disconnected from the cart and launcher after launch.

6. The apparatus must be constructed by the contestants themselves and should not consist mainly or exclusively of any sort of pre-purchased model kit or device.

7. The cart must have a 5 cm. by 5 cm. square rigid flag placed parallel to the direction of travel whose bottom edge is situated at a height of 15 cm. from the floor and whose front edge is even with the foremost part of the car. This flag must be directly attached to a rigid vertical flagpole or other rigid vertical piece of the cart. This flag must remain attached in this manner at all times. Note that flag placement is important as it is used to time the cart.

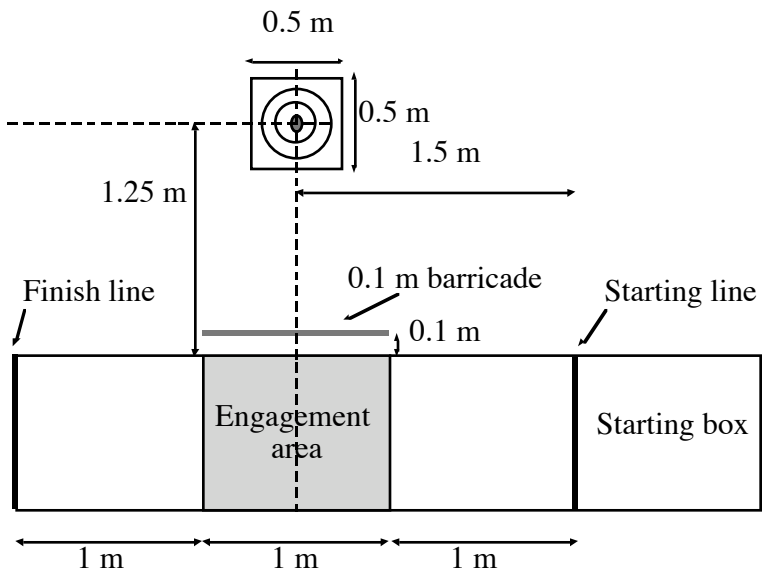

Overhead view of the Theatre

The Theatre:

8. The theatre is illustrated above. The track is on a hard linoleum floor and is 3 meters long by .75 meters. The center of the target is 1.25 meters from the edge of the track and 1.5 meters from the starting line. Behind the starting line is a .75 meter by 1 meter starting box for set-up of the apparatus. The engagement area is the section of the track starting 1 meter after the starting line and ending 1 meter before the finish line and is delineated by black electrical tape. A 0.1 meter high barricade 1 meter in length is present parallel to engagement area 0.1 meter from the edge.

9. The circular target has an overall diameter of 1/2 meter. It is made of construction paper and is secured to the floor by tape. Its top is marked with a set of concentric circles of diameter 5, 10, 15, 20, 25, 30, 35, 40, and 50 cm. Scoring will be based on which of the concentric circles the projectile lies entirely within after it comes to rest.

Rules:

10. Contestants will be allowed a total of 5 minutes to set up their apparatus and complete two trial runs. Each trial run must be completed in 30 seconds. Contestants will tell the judges when they are ready to begin each trial. When indicated by the judges, contestants will begin the trial run by releasing the mass.

11. No part of the apparatus can be in front of the starting line before the mass is dropped. No external intervention is allowed after the release of the mass. **Specifically, no external**

intervention is allowed to guide the cart or trigger the launching mechanism.

12. The projectile must be launched from the cart onto the target while inside the engagement area and must pass over the barricade on its flight to the target. The cart must remain on contact with the ground at all times during the trial. The cart and launcher must travel entirely within the bounds of the track and not make contact with objects outside the track. All parts of the cart and launcher must cross the finish line together.

13. The score will be given by the score = T A/ M. T is the time for the cart to traverse the course. M is equal to 1 if the mass of the projectile is less than 35 g, 2 if the mass of the projectile is between 35g and 70 g and 3 if the mass is greater than 70 g. A is the diameter of the concentric circle on the target that the projectile lies entirely within when it comes to rest. Note that the smallest attainable value of A is 5. The lowest score attained in the two trial runs will be used as the team score. In the event of a tie, both scores will be used to resolve the tie.

14. The timer will start when the flag on the cart crosses the starting line and will stop when the flag crosses the finish line 3.0 m away. If the cart does not cross the finish line in 30 seconds, the run will be declared over. External intervention is permitted to stop the cart after it completely crosses the finish line to prevent undue damage. Carts that travel less than 3 meters in 30 seconds will be assessed an additional time penalty proportional to 3 meters minus the distance they attain.

15. Projectiles that break into pieces will be given an accuracy A based on the distance of the furthest piece from the centre of the target. Projectiles making contact with objects outside the track with the sole exception of the target will be assessed a penalty on their accuracy A.

16. Of course using your own W.O.P.R* to compute the necessary trajectories couldn't hurt.

*"WarGames" 1983 John Badham, director, Matthew Broderick and Alley Sheedy,

Conserve Your Energy (And Angular Momentum)

The event consists of constructing a device using given parts that will do its best to conserve potential energy and/or angular momentum.

Rules:

1. Teams are not allowed to bring or use any materials or equipment in the device to be constructed in this event other than those provided.

2. At the beginning of the event, each team will receive a set of various parts. All sets are alike. The device teams build must be made entirely from parts available. **Not all parts must be used.**

3. Teams will have 20 minutes to construct the device. After the 20 minute period, each team present their device to the judges for testing.

4. The device constructed will have to carry out a prescribed cycle or cycles of motion. The exact specification of this will be given to the teams only at the time of the event.

5. The team whose device best carries out the prescribed task will be the winner.

To prepare for this event, teams should review conservation of energy and angular momentum, especially as it applies to systems that both translate and rotate.

The Electrical Maze

This event will require teams to race to solve an electrical maze.

Materials: The following equipment will be provided:

multimeters
paper
ruler

Rules:

1. Contestants are not allowed to bring or use any materials or equipment other than those provided with the exception of calculators and pens or pencils for writing.

2. Teams will be given a DC power supply and a small subcircuit containing one or more light emitting diodes and a circuit with some or all of the following components: resistors, capacitors, switches and diodes. The components may not necessarily be visually identifiable to the contestants; it may be necessary to identify them using their properties and the provided equipment. Recall that a diode is a component which allows the passage of current in only one direction. A capacitor is a charge storage device with the property that it does not allow the passage of DC current. A switch is a device that allows current to pass in both directions when closed, and does not allow current to pass when open. A resistor changes the voltage across itself according to Ohm's law.

3. Each team will be expected to find a path through the circuit that will provide a specified voltage and current to the small subcircuit. Successful completion of this task will cause the light emitting diode or diodes to perform in some specified manner. This path will be made by opening and closing switches. Each team will also be expected to draw a circuit diagram of the entire maze. These diagrams will be turned in when the team has successfully solved the maze and will be used in the scoring.

4. Each team will be awarded a time based on the time that their circuit diagram is turned in to the event organizers. The winners of the event will be determined by the least time taken in finding a correct solution to the maze that passes through the least number of components. In the unlikely event of a tie, the clarity and completeness of the circuit diagram will be a deciding factor in determining a winner.

Intuitive Physics

Each team will be presented with simple experiments or simulations based on basic principles of mechanics, electricity and/or magnetism. Teams will be required to provide answers to questions based on these experiments or simulations. Answers to questions may involve simple calculations. The team with the most correct answers will win. Quality of answers involving explanations will be used to resolve ties.

Mystery Event

This event will involve solving a simple experimentally oriented problem or problems using logic and knowledge of basic principles of physics.

Iron Chef: The Musical

In this pre-built event, contestants apply their knowledge of food and physics to the construction of a completely edible musical instrument capable of playing "Twinkle, Twinkle Little Star" in the key of G.

If memory serves us right, Canada is famous for its culinary, musical and physics talent. Thus today, March 4, we hold a novel competition in which the theme ingredients of this event are food, physics, and music. Not only must put your their culinary skills to the ultimate test like Iron Chef Rob Feenie, you must also give a winning musical performance like INXS lead singer J.D. Fortune that relies on your complete mastery of the physics of music.

Apparatus. The entire apparatus will be called the instrument.

1. Contestants must bring all materials needed for their instrument.

2. Teams can bring a tuning device to tune their instrument. However, contestants will **not** be allowed use any tuning meter or any other device to measure or adjust musical properties during the performance. **Teams found to be using such a device during the performance will be disqualified.**

3. The instrument must be constructed entirely by the contestants themselves and should not consist mainly or exclusively of any sort of pre-purchased device.

4. All materials in the instrument must be edible. In addition, the whole instrument must be edible immediately after the performance with no additional preparation. All adhesives used must be also be standard edible materials such as flour and water. Anything that must be boiled extensively before consumption or lacks nutritional or caloric value should not be a part of your instrument. In terms of materials, the best way to think of this criteria is: if you would be surprised to see it on your dinner plate, it shouldn't be a part or your instrument. Examples of **edible** materials are fruits, vegetables, candy, pasta, and cookies. Examples of **inedible** materials are sawdust, reeds, bark, and aluminum foil. Note that although these materials are nontoxic and are thus safe to be swallowed, they are not edible. Therefore they are examples of types of material that cannot be used.

5. Chairman Kaga will defer from consuming your instrument at this competition. Instead your team may be given the honor of eating your own creation. Teams should be prepared to demonstrate the nature of their materials by consuming samples of them in the presence of the judge.

6. The team must send a digital picture of their instrument and a recipe for it, both clearly labeled with the school name, before the start of the event on March 4, 2006. E-mail them to

ironchef@noether.physics.ubc.ca

7. The instrument is allowed to be of any type such as a string or wind instrument. However, the instrument must be the source of the sound production: teams cannot whistle or hum notes into the instrument. For example, an instrument such as a kazoo would violate this rule.

.

Rules:

8. The team must have at most two members called musicians: one is the note player and the other is the song player. One person can do both duties. Teams must designate these two members to the

judges at the beginning of the performance.

9. All teams and spectators must be quiet during all performances. Any team making noise during any performance will be disqualified.

10. Before the start of the performance, the team will be called and given 2.5 minute to prepare and tune their instrument for playing. This is called the tuning period. At this point a team may use a tuning meter, or other tuning device they have brought to assist them.

11. After tuning the instrument, the performance will begin. The team note player will be asked to play and hold several notes from the song "Twinkle, Twinkle Little Star" on the instrument in the key of G. Teams may choose any octave they wish. Each note should be sustained for 2 sec. The judge will measure the accuracy of the pitch of the notes being played using sound analysis equipment. This equipment will be adjusted such that C is 256 Hz.

12. Next, with no further adjustments, the song player will perform the song, in key of G in the same octave chosen in rule 11. The tempo of the song should be such that the entire song is completed in a time between 20 and 30 seconds. Each performance will be recorded for the judge's use during the analysis. The judge will give a score based on the musical performance of the song. Again, this part of the score is determined by sound analysis equipment rating factors including but not limited to the accuracy of the pitch, the sustained nature of the notes and volume.

13. After the performance, the judge may ask your team to eat any portion of instrument.

14. The overall score is based on the score for accuracy of pitch (Rule 12) and the score from the musical performance (Rule 13). All teams will receive a score unless they are disqualified. Ties will be broken by best range and taste of the instrument.

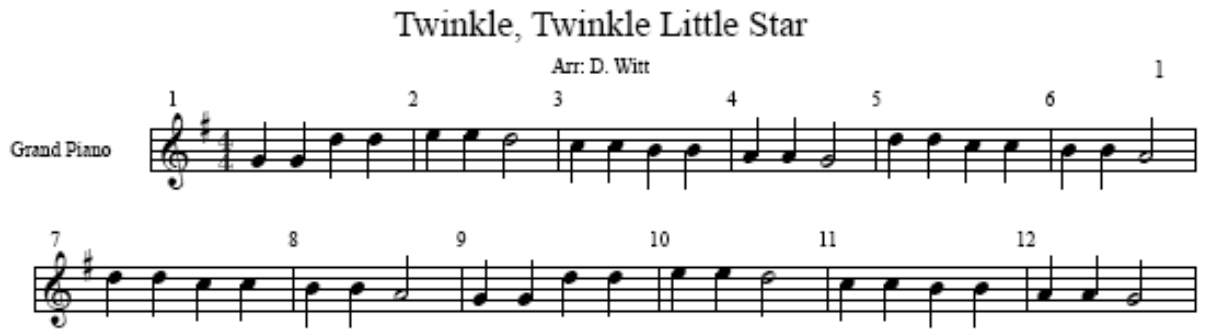

Example: The following is a simple example of a crude instrument. This example is a wind instrument, however, your construction is not restricted to winds. Take a large carrot, 2 cm radius, and core it by using a large drill bit turned by hand. For safety, don't use an electric drill! Once the carrot is cored, one can make an open pipe or half open pipe. One can blow across the top of the carrot like a bottle to generate notes. Using multiple carrots of different lengths, a pan flute can be constructed. Finger holes can be added to improve the carrot instrument.

Two simple ways to do a rough test of the sound quality of your instrument are the following:

1. One can check it with a tuning meter. If one does not have access to a tuning meter, there are freeware and shareware tuning meter programs which can be downloaded and used on your computer to test your instrument; see our web page for details.

2. A very simple alternate to a tuning meter is to compare your instrument's notes to a ordinary instrument such as a piano or a tuning fork using beats.

Finally, teams can bring their own ice chest (cooler) to keep their instrument fresh

This page intentionally left blank

THE TWENTY SEVENTH

UBC PHYSICS OLYMPICS

RULE BOOK

March 5, 2005

Financial sponsorship is provided by the Rex Boughton Memorial Fund.

The UBC Physics Olympics is organized by the Department of Curriculum Studies (Mathematics and Science Education) and the Department of Physics and Astronomy.

In the Spirit of Physics

The wording of each challenge in this year's rule book has been carefully prepared to define each task as precisely as possible. It is expected that all participants will produce solutions which comply with the task as defined. Normal physical interpretations will be applied to all the terminology used in defining the tasks. Those solutions which, in the opinion of the judges, do not comply with the spirit and intent of the challenge, will be disqualified. General questions regarding the challenges may be directed to the coordinators of the Olympics. The coordinators will accept inquiries which may help them to prepare for unusually good solutions to the problem.

Please direct all inquiries regarding the rules to K. Schleich or D. Witt at preferably via email to schleich@noether.physics.ubc.ca or by phone to (604) 822-6286. Phone will be unavailable Feb. 14-19 due to construction: call (604) 454-8611 during this time. This rule book and any clarifications will also be available on the world wide web at http://noether.physics.ubc.ca/.

General Rules

Each school may enter one official team made up of a maximum of 10 members, of which a maximum of 5 participate in each event. Gold, silver and bronze medals will be awarded to the official teams scoring the highest, second highest and third highest aggregate scores. In addition, gold, silver and bronze medals will be awarded to the official teams scoring the highest, second highest and third highest aggregate scores. All teams must enter all events. The events are scheduled so that it is possible for all teams to enter all events. All ties will be broken. A trophy will be awarded to the school sponsoring the official team achieving the highest aggregate score.

TWO of the events require a pre-built structure. These entries must be checked in at the time of registration on the morning of the competition at which time they will be stored in a safe place until the time of the event.

Our Special Thanks to

Don Witt	Andrzej Kotlicki	Raymond Gao	Darren Peets
Melody Tsou	Ana Pop. Jr.	Christina Pop	Philip Hestvik
Rosalyn Seeton	Alan Robinson	Bob Orlando	Alex Chen
Mark Homenuke	Jonathan Fraser		

and to

Dr.Jeff Young Head, UBC Department of Physics and Astronomy

and all students of the Physics and Physics Engineering program who assist in the design organization and running of this Physics Olympics.

Rescue Me

Students will build a simple model hovercraft that will sail a racecourse carrying the maximum possible load.

Apparatus:

Contestants will provide a hovercraft, the load it carries and, if desired, one12V AC to DC power adapter (wall wart) with sufficient wire for running the race. The load must be separate and removable from the hovercraft.

1. The hovercraft and load must be constructed by the contestants themselves and should not consist mainly or exclusively of any sort of pre-purchased model kit or device.

2. The sole source of lift for the hovercraft must be no more than 2 computer cooling fans, either case fans or CPU fans. These fan must be ones sold for use in personal computers capable of running Microsoft Windows 98 or XP or MacOs. Contact the organizers if you need further information or wish to check if your fan is allowed.

3. The hovercraft must hover; it must ride on a cushion of air produced by the operation of the cooling fan(s) at all times during the race. It must visibly rise when powered on and not move under application of force when not powered. For example, it cannot move when unpowered from the wind provided by the race course fan at various settings. Supplemental wheels, bearings or other devices that reduce the effects of friction are not allowed and will result in disqualification.

4. The hovercraft engine can use either one12V AC to DC power adapter (wall wart) OR a completely self contained power supply (i.e. batteries). If you use an adapter, you must ensure that the wire connecting it to the hovercraft remains less than 8 cm from the floor at all times to prevent spurious triggering of the timing gates. Note a hovercraft with a completely self contained power supply will obtain a scoring bonus.

5. The hovercraft carrying its load (but excluding the adapter and connecting wire) must be able to fit into a 50cm length by 50cm width by 30 cm height box at all times during the event. All parts of the hovercraft and load must finish the race together.

6. The hovercraft must have a 5 cm by 5 cm square rigid flag placed parallel to the direction of travel whose bottom edge is situated at a height of 10 cm from the floor when the craft is in operation. Note that flag placement is important as it is used to ensure triggering of the timing gates.

7. Propulsion of the hovercraft can come only from the computer cooling fans or wind from the box fan provided by the organizers.

8. The load must be transported solely by the hovercraft. Loads that self-transport will result in disqualification.

Racecourse

The hovercraft will race on a drag strip approximately 1 meter wide and 2 meters long laid out on linoleum floor. A power bar will be provided on one side of this strip at the center. There will be an approximately 1 meter square area behind the starting line for setup of the hovercraft. An optional source of energy for propulsion of the hovercraft is provided by a standard 22 inch by 22 inch box

fan at low speed 2-3 meters behind the start line. This fan is provided by the event organizers. Organizers will turn off the fan for duration of the race by request of contestants.

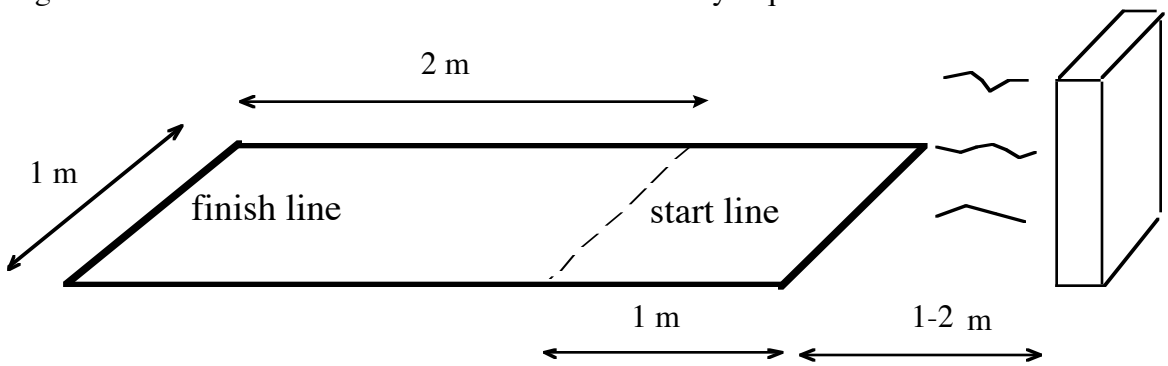

Figure 1: Illustration of the drag strip.

Rules:

9. Teams will have a total of 5 minutes to set up and run their race. Only one trial will be allowed.

10. No part of the hovercraft can be in front of the starting line before the start of the trial. No external intervention is allowed after the start of the trial.

11. The hovercraft must stay in bounds during the entire race to receive a time. The timer will start when the hovercraft crosses the starting line and triggers the timing gate and will stop when the hovercraft crosses the finish line and triggers the timing gate.

Scoring:

12. If the hovercraft completes the race, the final score will be given by the formula

$$\text{Score} = 2*B*(L+.1)/T$$

L = the weight of the load (in Newtons), T = the time (in seconds) and B = 4 if the hovercraft has a self contained power supply and 1 otherwise.

13. If the hovercraft does not cross the finish line, the final score will be modified to

$$\text{Score} = D*B*L/300$$

where D = distance (in meters). The distance will be the shortest distance from the front edge of the hovercraft to the starting line. If the hovercraft goes out of bounds at any time before crossing the finish line the shortest distance from the point at which the hovercraft exits to the starting line will be used.

Mystery Event

This event will involve solving a simple experimentally oriented problem or problems using logic and knowledge of basic principles of physics.

Quizzics

A game show in which teams compete against each other to demonstrate general physics and astronomy knowledge.

Rules:

1. Each game will consist of two rounds of competition. Each team member will receive a PRS clicker (An electronic entry device similar to a TV remote) for use in answering the questions.
2. First round:
    1. Teams will be tested on a set of randomly chosen questions. Questions will be in multiple-choice format, testing general knowledge of physics and astronomy ranging from famous physicists and discoveries to mechanics, waves, fluids, electromagnetism and quantum physics.
    2. All 5 team members will be required to answer each of these questions individually. Each team member will input his/her own answer using the PRS clicker. The team score will be the sum of the number of correct answers made by all team members.
    3. Teams found to be communicating answers between members during the first round will be disqualified.
3. Second round:
    1. Questions will be in both multiple-choice and single-answer format and may require simple calculations or more detailed knowledge.
    2. The 5 team members are allowed to consult with each other during the second round. Only one answer will be submitted per team in the second round. The team score for this round will be 5 times the number of correct answers.
4. The total score will be given by the sum of the team scores from both rounds. Ties will be broken by short set of extra challenge questions.
5. The top 6 teams overall will meet in a final game of Quizzics to determine first through sixth place. The other places will be will be awarded in accordance with the total scores.

Resistance is Futile

The goal of this event is to solve a problem using resistors, diodes and light emitting diodes in a DC electrical circuit. To prepare for this event, contestants should know Ohm's law and understand circuits involving series and parallel resistors and properties of diodes.

Rules:

1. Contestants are not allowed to bring or use any materials or equipment other than those provided with the exception of pens or pencils for writing and a videotape (not DVD!) of any episode of Star Trek: The Next Generation involving the Borg as a good luck charm.

2. The teams are expected to identify various components of an electrical circuit using the equipment provided. This equipment will include a digital multimeter. Armed with this knowledge, students will be required to construct or modify a circuit that utilizes these components so that it will satisfy certain criteria.

3. The winning team will be the team correctly carrying out all parts of the task assigned. Part marks will be awarded to teams with partially correct answers. If two or more teams receive the

same score, the time they took to determine the correct solution will be used to break this tie.

Optical Obstacle Course

The goal of this event is to direct a laser beam or beams through an optical obstacle course. The optical obstacle course will contain optical objects such as prisms, plane mirrors and other transparent objects. Some course elements will be fixed and some will be movable.

To prepare for this event, contestants should be able to use Snell's law and the law of reflection. Contestants should bring a non-programmable calculator, pencil, protractor, and a ruler.

Rules:

1. No laser pointers or other collimated light sources are permitted, other than those provided by the event organizers. Teams found possessing these will be disqualified.

2. Students may not move any of the fixed course components. One fixed course component will be the laser. Other components that are fixed will be specified at the time of the event.

3. The beam or beams may be required to pass through certain fixed course components for a successful completion of the obstacle obstacle course. These components will be specified at the time of the event.

4. A maximum of fifteen minutes will be allowed for each team to set up the movable objects in the course. No movable course objects may be placed outside of the designated course boundaries. Only the equipment provided may be used.

5. No trial runs are permitted. The laser will turned on by one of the event coordinators after the students' setup is complete. (Alternately, at the end of the allotted time if this comes before the contestants have fully completed their setup). After the laser has been turned on by the coordinator, no course objects may be moved.

6. Score will be based on accuracy on carrying out the required task. Time spent in solving the course will be used to resolve any ties with shorter time being better.

The Mechanical Timer

The object of this event is to build an adjustable mechanical timer which can time two different time intervals. The two times will be given to your team on the day of the event in your round. One time interval will lie in the range of 10sec-60sec and the other time interval in the range 1min-3min.

Apparatus: The entire apparatus provided by the each team consists of two parts; a timer and a glass marble dropped to indicate that time is up.

1. Teams are allowed to bring one timer to use in this event.

2. The timer must be built without any metal parts with the exception of paper clips (length before unfolding of 3 cm or smaller), sewing pins (length 3 cm or smaller) , tiny nails or screws (length 4 cm or smaller) and staples (standard desk stapler size or smaller).

3. The timer must be constructed entirely by the contestants themselves and not consist entirely or partially of any manufactured device or kit. For example, no clock or commercially made timer parts

may be used in the construction.

4. The only sources of energy allowed to run the timer are mechanical forms of potential energy. No electrical power or other electrical or chemical source of energy is allowed.

5. The timer must be able to fit into a box of 40cm by 40cm by 40cm at all times during the event and must be designed to sit unsupported on a flat surface.

6. The timer must be constructed so that when time is up, it drops a marble into the stop time apparatus. The stop time apparatus is provided by event organizers.

The Stop Time Apparatus:

The stop time apparatus will be provided by event organizers. It consists of a funnel (Norge Nunc International 100 mm powder funnel, height 10.4 cm, top inner diameter 9.9 cm, length of tube 3.4 cm, smallest inner diameter of tube 1.7 cm) whose top is mounted 18 cm above the surface of table and a stop gate positioned immediately below the funnel. The contestants' timer may extend over the funnel at a height over 20 cm from the surface. No part of the contestants' timer can enter the space at or below the top of the funnel or touch the funnel at any time to ensure correct functioning of the stop gate.

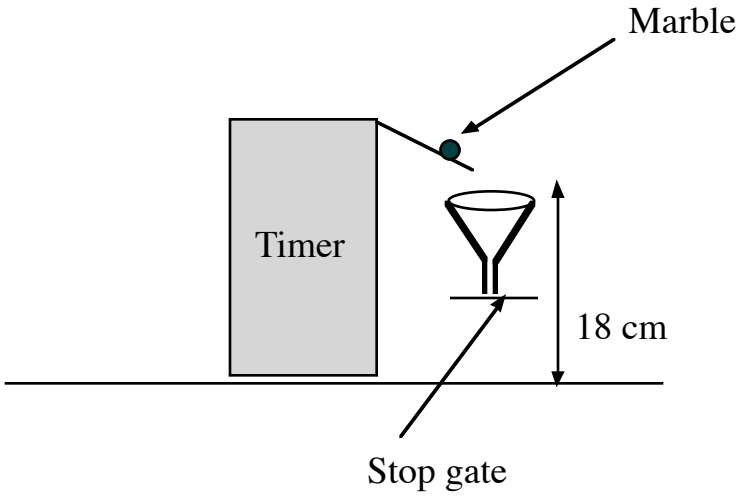

Figure 2: Diagram of Timer Setup.

Rules:

7. At the start of the trials, two randomly selected times will be chosen and told to the team. One time will lie in the range of 10-60 seconds and the other time in the range 1 - 3 minutes. Teams will have 2 minutes to get there timer set up for each trial.

8. Contestants must demonstrate that their marble will trigger our stop gate or else must use a marble provided by the event organizers.

9. Contestants must **not** bring a watch, stop watch or any other timing device into this event. **Teams found to possess such a device during the event will be disqualified.**

10. At the start of a trial, the team will start their timer when directed to by the event organizers. Failure to start the timer within 1/2 second will result in scoring penalty described below. At the end of each trial, the timer will drop the marble into the funnel indicating that it has finished timing. The stop time will be measured at the instant when the marble drops out of the funnel.

11. No external human intervention is allowed after starting the timer during each trial.

Scoring:

12. The score for each trial will be given by

$$Score=1000\ |Tm-Ts|\ /\ Ts$$

where Tm is the time interval of the timer as measured by the judges and Ts is the time interval as specified by the judges at the start of the event. Note the score depends on the absolute value of the difference of these times. If a team fails to start their timer within 1/2 second of the start time, they will receive a score of 1000 for that trial. The total score for the event will be the sum of the scores for each time. The team with the lowest score will win. Any ties will be broken by the judge's assessment of creativity of design.

The Seventh Annual Physics Olympics Open Event

This year, we are again pleased to announce a completely optional event designed for the participation of those people who accompany the official teams to the Physics Olympics. This event **is not** an official Physics Olympics event and is intended for teacher teams, informal B teams (those not participating in the regular Physics Olympics events) and any other informal teams who wish to try it. No trophies will be awarded in this event, but the names of the top finishers will be announced at the awards ceremony. This event will be run at announced periods all day; anyone who wishes to participate can do so by showing up at one of these times. This year, our event is

Stress Test

The goal of this event is to construct a structure entirely out of 8.5 by 11 inch copy paper that will withstand the maximum stress or strain.

Rules:

1. Contestants are not allowed to bring or use any materials or equipment other than those provided.

2. Contestants will be provided 8.5 by 11 inch copy paper to construct a structure during a 10 minute period to carry up to a maximum specified stress or strain. The actual challenge will be revealed only on the day of the event.

3. The winning team will be the team whose design best carries out the task.

This page intentionally left blank

THE TWENTY SIXTH

UBC PHYSICS OLYMPICS

RULE BOOK

March 6, 2004

Financial sponsorship is provided by the Rex Boughton Memorial Fund.

The UBC Physics Olympics is organized by the Department of Curriculum Studies (Mathematics and Science Education) and the Department of Physics and Astronomy.

In the Spirit of Physics

The wording of each challenge in this year's rule book has been carefully prepared to define each task as precisely as possible. It is expected that all participants will produce solutions which comply with the task as defined. Normal physical interpretations will be applied to all the terminology used in defining the tasks. Those solutions which, in the opinion of the judges, do not comply with the spirit and intent of the challenge, will be disqualified. General questions regarding the challenges may be directed to the coordinators of the Olympics. The coordinators will accept inquiries which may help them to prepare for unusually good solutions to the problem.

Please direct all inquiries regarding the rules to K. Schleich or D. Witt at preferably via e-mail to schleich@noether.physics.ubc.ca or by phone to (604) 822-6286. This rule book and any clarifications will also be available on the world wide web at http://noether.physics.ubc.ca/.

General Rules

Each school may enter one official team made up of a maximum of 10 members, of which a maximum of 5 participate in each event. Gold, silver and bronze medals will be awarded to the official teams scoring the highest, second highest and third highest aggregate scores. In addition, gold, silver and bronze medals will be awarded to the official teams scoring the highest, second highest and third highest aggregate scores. All teams must enter all events. The events are scheduled so that it is possible for all teams to enter all events. All ties will be broken. A trophy will be awarded to the school sponsoring the official team achieving the highest aggregate score.

TWO of the events require a prebuilt structure. These entries must be checked in at the time of registration on the morning of the competition at which time they will be stored in a safe place until the time of the event.

Our Special Thanks to

Don Witt	Andrzej Kotlicki	Arnel Lim	Darren Peets
Melody Tsou	Ana Pop. Jr.	Christina Pop	Tom Wu
Natalie Silvanovich	Kiri Nichol	Willie Huang	Rosalyn Seeton

and to

Dr. Jeff Young Head, UBC Department of Physics and Astronomy

and all students of the Physics and Physics Engineering program who assist in the design organization and running of this Physics Olympics.

Pirates of the Caribbean

The object of this event is to build a boat that will sail the racecourse described below in the fastest possible time that returns the most Aztec gold pieces (loonies) to the sunken city (target) to lift the dread curse of physics phobia.

Teams will bring a boat, optional treasure chest and Aztec gold pieces (l Aztec gold piece = 1 loonie) to this event.

Construction of boat:

1. The only source of energy used to move the boat must be supplied by wind power provided by a standard 22 inch by 22 inch box fan on medium speed. This fan is provided by the event organizers.

2. The boat must be designed to transport Aztec gold pieces optionally set inside one treasure chest. It should be designed to drop the Aztec gold pieces, possibly in the treasure chest, inside the target (the sunken city) marked on the floor of the trough.

3. The optional treasure chest is a single object of both length and width less than 9 inches at all times containing loonies.

4. Both the length and the width of the boat must be less than 9 inches at all times during the race. Both the length and the width of the boat together with the optional treasure chest must also be less than 9 inches at all times before the treasure chest is dropped.

5. The boat must have a part that is a minimum height of 4 inches above the water line flying a 5 cm by 5 cm square paper flag centered at a height of 4 inches.

6. The mechanism that controls where the Aztec gold pieces (loonies), and/or the optional treasure chest, is dropped must be contained entirely within the boat and/or treasure chest and must operate without any external intervention.

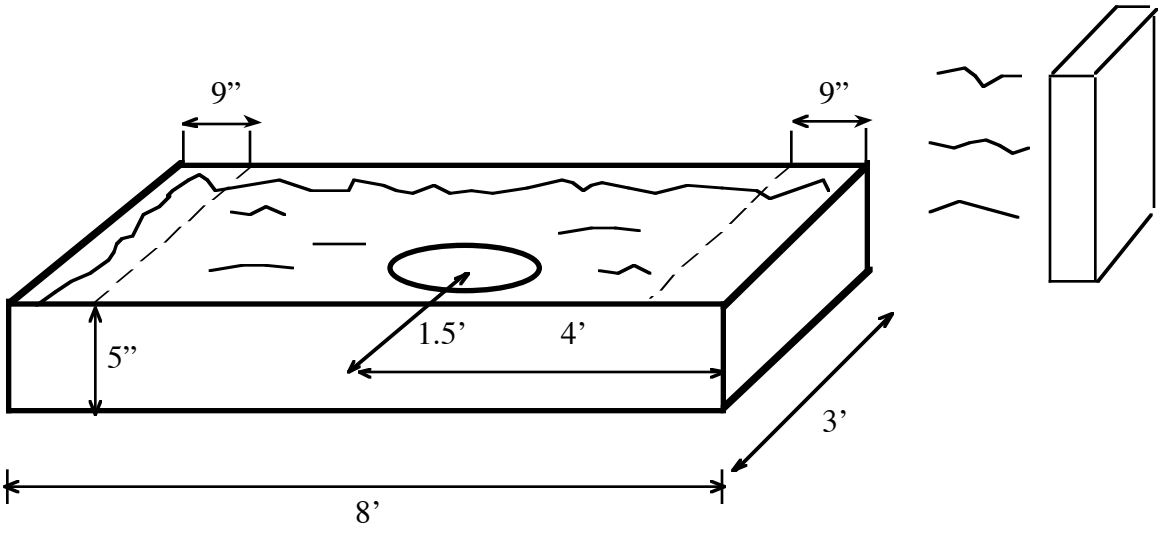

Perspective view of trough

Racecourse:

The course will consist of an 8 foot long by 3 foot wide by 5 inch deep trough filled with water. The start gate will be placed 9 inches from one end of the trough and the finish gate will be placed 9 inches from the other end of the trough. The fan will be placed 3 to 4 feet away from the starting edge of the trough.

Target:

The target (sunken city) consists of a 12 inch diameter circle painted on the bottom of the trough. Its center is 4 feet from the starting edge of the trough and 1.5 feet from the left wall.

Rules for racing and scoring:

7. Teams will have a maximum of 5 minutes to conduct one trial of their boat.

8. For the trial, the back end of the boat will be placed against the end of the trough nearest to the starting gate and released by a member of the school team. The boat may not push off from the sides or back of the trough or from the launching team member. The launcher must release the boat without providing it any momentum.

9. The boats are allowed to hit the sides of the trough and will not be disqualified if they take on water, assuming that they finish.

10. The timer will start when the boat triggers the start gate and stop when the boat triggers the finish gate. The boat must drop the Aztec gold pieces before crossing the finish gate.

11. After the race is complete, the number of Aztec gold pieces (loonies) in the target will be counted by event organizers. An Aztec gold piece will be considered to be in the target if all of it is within the target circle. Aztec gold pieces in a treasure chest will be considered to be in the target only if the entire treasure chest is inside the target.

12. The score will be computed by the formula

$$\text{Score} = (2n+1) / t$$

where t is the time in seconds and n is the number of Aztec gold pieces (loonies) in the target. The team with the highest score will win. Should there be a tie for the best score, the boat with the fastest time will win.

Additional information:

Note that wind, current and tide conditions on race day may vary from those encountered at your location - this is a part of sailing.

After the trials, all Aztec gold pieces will be fished out of the trough by event organizers and returned to the contestants. If the contestant choose, they can donate their Aztec gold pieces to the Johnny Depp Fan Club.

Mystery Event

This event will involve solving a simple experimentally oriented problem or problems using logic and knowledge of basic principles of physics.

Quizzics

A game show in which teams compete against each other to demonstrate general physics and astronomy knowledge.

Rules:

1. Each game will consist of two rounds of competition. Each team member will receive a PRS clicker (An electronic entry device similar to a TV remote) for use in answering the questions.
2. First round:
    1. Teams will be tested on a set of randomly chosen questions. Questions will be in multiple-choice format, testing general knowledge of physics and astronomy ranging from famous physicists and discoveries to mechanics, waves, fluids, electromagnetism and quantum physics.
    2. All 5 team members will be required to answer each of these questions individually. Each team member will input his/her own answer using the PRS clicker. The team score will be the sum of the number of correct answers made by all team members.
    3. Teams found to be communicating answers between members during the first round will be disqualified.
3. Second round:
    1. Questions will be in both multiple-choice and single-answer format and may require simple calculations or more detailed knowledge.
    2. The 5 team members are allowed to consult with each other during the second round. Only one answer will be submitted per team in the second round. The team score for this round will be 5 times the number of correct answers.
4. The total score will be given by the sum of the team scores from both rounds. Ties will be broken by short set of extra challenge questions.
5. The top 6 teams overall will meet in a final game of Quizzics to determine first through sixth place. The other places will be will be awarded in accordance with the total scores.

Motor Mayhem

In this event, teams will build a DC electrical motor optimized to perform a task or property specified by event organizers.

Rules:

1. Teams should bring pens, pencils and non programmable calculators to the event. No other materials may be brought or used, other than those supplied by the event organizers.

2. Teams will be supplied with components used in constructing a DC motor such as batteries, paper clips, magnets and copper wire. Motors may be built using only the materials provided by the event organizers.

3. Teams will be scored on the performance of their motor on the task or property specified by event organizers and their understanding of the physics behind it.

4. Don’t worry, more specific directions and information will be given at the time of the event. With these directions you will be able to figure out what to do. In addition, there will be friendly, helpful invigilators at the event to make sure you have no trouble getting started on your motor.

Do You See what I See?

How did Galileo observe the planets? How do biology students see microorganisms? In this experiment you will have to demonstrate your theoretical and applied aptitude in optics and build a simple optical instrument.

To prepare for this event, you should know the thin lens equation and how to use it:

$$\frac{1}{i} + \frac{1}{o} = \frac{1}{f}$$

where i is the distance to the image from the lens, o is distance to the object from the lens and f is the focal length of the lens. You should understand focal lengths, magnification, virtual and real images, and know the characteristics of converging and diverging lenses.

Rules:

1. You should bring a non-programmable calculator and pencil.

2. Assorted lenses, an optical bench and all other materials needed for this event will be provided by the invigilators. No other materials may be used.

3. You will be required to construct an optical instrument that has a specified property or properties. You will also be required to carry out calculations using the thin lens equation to aid the design of this instrument.

4. The score for this event will be based both on the correctness of the calculations and the success of the construction and design of the optical instrument.

5. This is not an impossible exercise. So don't despair if you do not know how to solve it before you get to the event. Also, the invigilators are a really fun bunch of people, so don't be afraid to ask questions.

The Descrambler

This is a prebuilt event in which participants must design and build a structure to protect an egg from breaking when a mass is repeatedly dropped on it from a height of one meter.

Teams will bring an apparatus consisting of three parts: a guide, a scrambler and an egg protecting structure.

Guide:

1.The guide will consist of a wood base and, if desired, a maximum of 4 thin wooden poles. The wood base must be 1 inch thick. It can be no smaller than 30 cm by 30 cm and no bigger than 50 cm by 50 cm.

2. The wooden poles are to be less than 3/4 inch in diameter. They are to be placed around the edges of the base. The wooden poles must extend up from the base a distance no less than 1.1 m or more than 1.4 m. They may be secured to the base by glue, nails and/or screws.

Scrambler:

3. The scrambler must consist of a single rigid object composed of solid, completely rigid materials such as iron, lead, other metals, brick or hardened concrete.

4. The scrambler must be designed to fall freely with an acceleration approximately equal to g when dropped. It must have a flat bottom surface that must be downward during at all times when dropped. The maximum diameter of this bottom surface must be no more than 20 cm.

5. The scrambler must be designed to first impact the egg protecting structure without ever touching any part of the guide and must not use the guide poles (if used) to slow its fall in any way.

Egg Protecting Structure:

6. The only materials that may be used in construction of the egg protecting structure are:
- Paper
- flat wooden toothpicks
- Natural fiber string of less than 1 mm diameter. The string must not have any metal component in it, and must be non-mono-filament – i.e. no fishing line or mono-filament dental floss.
- Small quantities of white glue to secure components together

7. The egg protecting structure must be designed so that it does not fully encase or otherwise attach to the egg. Specifically it sits freely over the egg and can be freely lifted up both before and after a trial for examination of the egg.

8. The egg protecting structure must fit in a 20 cm by 20 cm by 20 cm box.

9. The egg protecting structure must not touch the poles of the guide at any time during a trial. In particular, the guide poles cannot act to support the egg protecting structure at any time.

Rules:

10. Each team will be allowed up to 5 trials. Teams will be given a total time of 10 minutes to set up and run the trials.

11. Teams will be given a single extra large grade A egg. The egg is to be placed directly on the wood base of the guide. The egg protecting structure is then placed over the egg.

12. The team's guide will be set on a piece of flat cardboard on top of the floor to protect the flooring.

13. Each trial begins when the judges indicate that they are ready. A team member will then drop the scrambler from a minimum height of 1 meter above the wood base of the guide onto the egg protecting structure. This team member will be required to do so from a sitting or kneeling position on a table positioned next to the guide. The tabletop has dimensions of 60 cm by 75 cm and is 77 cm from the floor.

14. The scrambler must freely fall with the flat bottom surface downward, approximately parallel to the wood base. The scrambler must hit the egg protecting structure first before touching any part of

the guide. The scrambler's center of mass must approximately hit the center of the egg protecting structure.

15. After the scrambler has come to rest, a team member will remove it, another team member will lift the egg protecting structure and show the judge the condition of the egg. The judge will evaluate the condition of the egg and place it in one of two categories - intact or broken.

16. The trial will be successful if the egg is intact and the fall of the scrambler satisfied rule 14 during the trial.

17. After each trial has ended, the team can choose to run another trial and if it does so, must quickly prepare for the subsequent trial by replacing the egg protecting structure over the same egg.

18. The score will be given by the following formula:

$$\text{score} = i * M_{scrambler} / (H * M_{structure})$$

where i is the number of successful trials, $M_{scrambler}$ is the mass of the scrambler, $M_{structure}$ is the mass of the egg protecting structure and H is the maximum height of the egg protecting structure, all as measured upon check-in to the event. The largest score wins. Ties will be broken by the mass of the egg protecting structure with the least massive structure winning.

THE TWENTY FIFTH

UBC PHYSICS OLYMPICS

RULE BOOK

March 8, 2003

Financial sponsorship is provided by the Rex Boughton Memorial Fund.

The UBC Physics Olympics is organized by the Department of Curriculum Studies (Mathematics and Science Education) and the Department of Physics and Astronomy.

In the Spirit of Physics

The wording of each challenge in this year's rule book has been carefully prepared to define each task as precisely as possible. It is expected that all participants will produce solutions which comply with the task as defined. Normal physical interpretations will be applied to all the terminology used in defining the tasks. Those solutions which, in the opinion of the judges, do not comply with the spirit and intent of the challenge, will be disqualified. General questions regarding the challenges may be directed to the coordinators of the Olympics. The coordinators will accept inquiries which may help them to prepare for unusually good solutions to the problem.

Please direct all inquiries regarding the rules to K. Schleich or D. Witt at 822-6286 or via email to schleich@noether.physics.ubc.ca. This rule book will also be available on the world wide web at http://noether.physics.ubc.ca/.

General Rules

Each school may enter one official team made up of a maximum of 10 members, of which a maximum of 5 participate in each event. If space permits, each school may enter one additional, unofficial team in all events. Gold, silver and bronze medals will be awarded to the official teams scoring the highest, second highest and third highest aggregate scores. Both official and unofficial teams are eligible for these medals. In addition, gold, silver and bronze medals will be awarded to the official teams scoring the highest, second highest and third highest aggregate scores. The official teams must be designated at registration. All teams must enter all events. The events are scheduled so that it is possible for all teams to enter all events. All ties will be broken. A trophy will be awarded to the school sponsoring the official team achieving the highest aggregate score. Points scored by unofficial teams will not be included in the school championship aggregate.

TWO of the events require a pre-built structure. These entries must be checked in at the time of registration on the morning of the competition at which time they will be stored in a safe place until the time of the event.

Our Special Thanks to

Don Witt	Arnel Lim	Vivide Chang	Darren Peets
Kiri Nichol	Cheryl So	Leanne Sharpe	Ana Pop. Jr.
Roman Petryk	Ralf Schuetzhold	Isaac Leung	David Jarvis
Shannon Wang	Edward		

and to

Dr. Brian Turrell, Acting Head UBC Department of Physics and Astronomy

and all students of the Physics and Physics Engineering program who assist in the design organization and running of this Physics Olympics.

Milk Jug Support Event

This is a pre-built event in which participants must design and build a structure to support one or more 4-litre plastic milk jugs filled with water over a table. The jug or jugs must hang from a single support point.

Materials:

The only materials that may be used in construction of the structure are:

- Wooden Popsicle sticks
- White glue (no glue guns)
- Wooden toothpicks
- Natural fiber string of less than 3 mm diameter. The string must not have any metal component in it, and must be non-mono-filament – i.e. no fishing line or monofilament dental floss.

The structure will support:

- A team specified number of 4-litre milk jugs containing only water. The milk jugs must not be altered in any way from their standard shape as purchased.

Teams are required to bring as many 4-litre milk jugs as they intend to support. In contrast to the natural fiber string used in the construction, any type of string or wire may be used to attach the milk jug(s) to the support point on the structure, and must also be supplied by the team.

Apparatus:

1. The structure must be designed to support one or more 4-litre plastic milk jugs filled with water for one minute. The team can choose how much water to use so long as the filled milk jug(s) exceed a minimum mass of 1 kg.
2. The structure must be able to fit into a bounding box of dimensions 30 cm by 45 cm by 60 cm at all times during the event.
3. The structure must sit within a 15 cm square section of the horizontal surface of a tabletop adjacent to the edge of the table as illustrated in figure 2. The structure must only come into contact with the tabletop in the designated area. No part of the structure can extend below the plane defined by the tabletop.
4. The milk jug(s) must all hang freely from the structure from one single support point, attached only by a loop of string or wire through the handle(s). They may not otherwise come in contact with any part of the structure, table or floor at any time during the trial.
5. The support point for the milk jug(s) must be over the tabletop and a horizontal distance of at least 250mm in from the table edge and at least 30 cm above the tabletop.
6. The structure can be attached to the table with a maximum of two C-clamps. The C-clamps are to be provided by the team. They each must be smaller than 20 cm in length and must have a contact area of their jaw of less than 8.5 cm^2 (See figure 1). The C-clamps must only touch wooden parts of the structure.
7. Any string used in the construction of the structure must terminate on wooden pieces a minimum distance of 10 mm from both the support point and the C-clamps.

Figure 1: Left:C-Clamps next to a meter stick. Right:Table next to a meter stick.

Table:

The tabletop has dimensions of 60 cm by 75 cm and is 77 cm from the floor. The thickness of the tabletop is approximately 2 cm. The table has a metal support underneath approximately 5.5 cm from its edge. The surface will be covered with one 150 mm by 150 mm sheet of 80 grit garnet paper backed sandpaper secured with masking tape. The sandpaper will extend to the edge of the table as illustrated in figure 2.

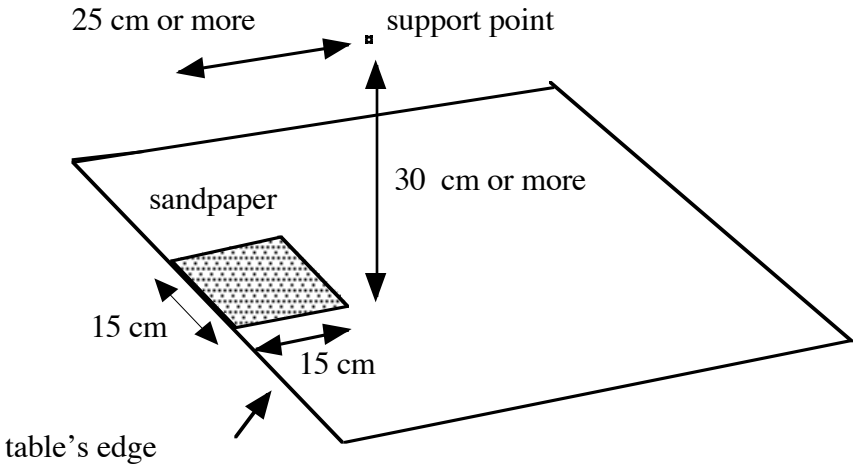

Figure 2. Diagram of the tabletop illustrating the sandpaper and position of support point. Note support point must remain within bounding box (not illustrated) for structure to satisfy rule 2.

Rules:

1. Each team will be allowed one trial. Teams will be given a total time of 10 minutes to set up and run the trial. When the team is ready to begin a trial, they must inform a judge, who will time the trial.
2. The trial begins when the judges indicate that they are ready and after all external support of the jug and structure is removed. The structure must support the freely hanging milk jug(s) without collapsing for a trial period of one minute.

3. During the trial, no external intervention is allowed to adjust, steady or support either the structure or the milk jug(s). A collapse of the structure or intervention before the trial is over will result in disqualification.
4. After the trial has ended, the team must quickly detach the milk jug(s) for weighing to determine the score.
5. The score will be given by the following formula: $s = M_{jug(s)}/M_{structure}$ where M is mass. The largest score wins.
6. Ties will be broken by the mass of the structure with the least massive structure winning.

Crash Scene Investigation, Vancouver

In this event teams will use their knowledge of the principles of basic physics to analyze a traffic accident scene.

Rules:

1. Teams should bring a non-programmable calculator, pencil or pen, protractor, ruler and a carpenter's tape measure.
2. Teams are not allowed to bring or use any materials or equipment other than the above with the exception of equipment provided by the event organizers.
3. Teams will be judged on their collection of data and the correctness of their assessment of that data. Ties will be resolved by answers to a set of bonus questions.
4. Teams are permitted to bring blue glowing lights as lucky talismans.

Good Clean Fun

This event will explore properties of soap bubbles.

Rules:

1. You are not allowed to bring or use any materials or equipment other than those provided with the exception of pens or pencils for writing.

2. Materials will be provided for constructing and studying soap bubbles.

3. You will be expected to do an experiment to determine a property or properties of soap bubbles. Your score will be based on the accuracy of these measurements and the description of the experiment.

4. Don't worry, more specific directions and information will be given at the time of the event. With these directions you will be able to figure out what to do. In addition, there will be friendly, helpful invigilators at the event to make sure you have no trouble blowing bubbles.

To prepare for this event, you should familiarize yourself with the basic physics of soap bubbles.

Mystery Event

This event will involve solving a simple experimentally oriented problem or problems using logic and knowledge of basic principles of physics.

Quizzics

A game show in which teams compete against each other to demonstrate general physics and astronomy knowledge.

Rules:

1. Each game will consist of two rounds of competition. Each team member will receive a PRS clicker (An electronic entry device similar to a TV remote) for use in answering the questions.
2. First round:
    1. Teams will be tested on a set of randomly chosen questions. Questions will be in multiple-choice format, testing general knowledge of physics and astronomy ranging from famous physicists and discoveries to mechanics, waves, fluids, electromagnetism and quantum physics.
    2. All 5 team members will be required to answer each of these questions individually. Each team member will input his/her own answer using the PRS clicker. The team score will be the sum of the number of correct answers made by all team members.
    3. Teams found to be communicating answers between members during the first round will be disqualified.
3. Second round:
    1. Questions will be in both multiple-choice and single-answer format and may require simple calculations or more detailed knowledge.
    2. The 5 team members are allowed to consult with each other during the second round. Only one answer will be submitted per team in the second round. The team score for this round will be 5 times the number of correct answers.
4. The total score will be given by the sum of the team scores from both rounds. Ties will be broken by short set of extra challenge questions.
5. The top 6 teams overall will meet in a final game of Quizzics to determine first through sixth place. The other places will be will be awarded in accordance with the total scores.

The Concentrator

The object of this pre-built event is to construct an energy-collecting apparatus to concentrate as much energy from a provided 250-Watt heat lamp as possible. This energy is to be used to heat a mass of water.

The Energy Source:

1. One 250-Watt R40 infrared heat lamp will be provided. It will be positioned so that the face of its bulb is parallel to the floor at a vertical distance of 1.2 m centered above a 1-m by 1-m square on the floor.
2. The concentrator can be placed on the floor anywhere in this square.
3. The heat lamp must be the ONLY energy source used to heat the water.

The Concentrator:

1. The concentrator consists of two parts: the apparatus and the water container.
2. The concentrator must be able to fit into a 1 m by 1 m by 0.9 m bounding box at all times during the event.
3. No part of the concentrator can be more than 0.9 m above the floor at any time during the event.
4. The apparatus can be made of any material. It must be designed so that the water container is heated only by electromagnetic radiation from the heat lamp.
5. The concentrator is to be designed so that the water container is easily separable from the apparatus. In particular, a judge must be able to easily insert the water container into the apparatus.

The Water Container:

1. The water container will be a black, 35-mm film canister without lid provided by the event organizers.
2. It will be provided at the beginning of the trial filled with a fixed amount of water at a uniform temperature between 0 and 40 degrees C. The amount and temperature will be the same for all contestants but will be set on the day of the event.
3. Teams cannot bring their own water or their own film canister. Teams must not modify the water container, i.e. the film canister and water it contains, in any way except by the action of their concentrator during the trial.

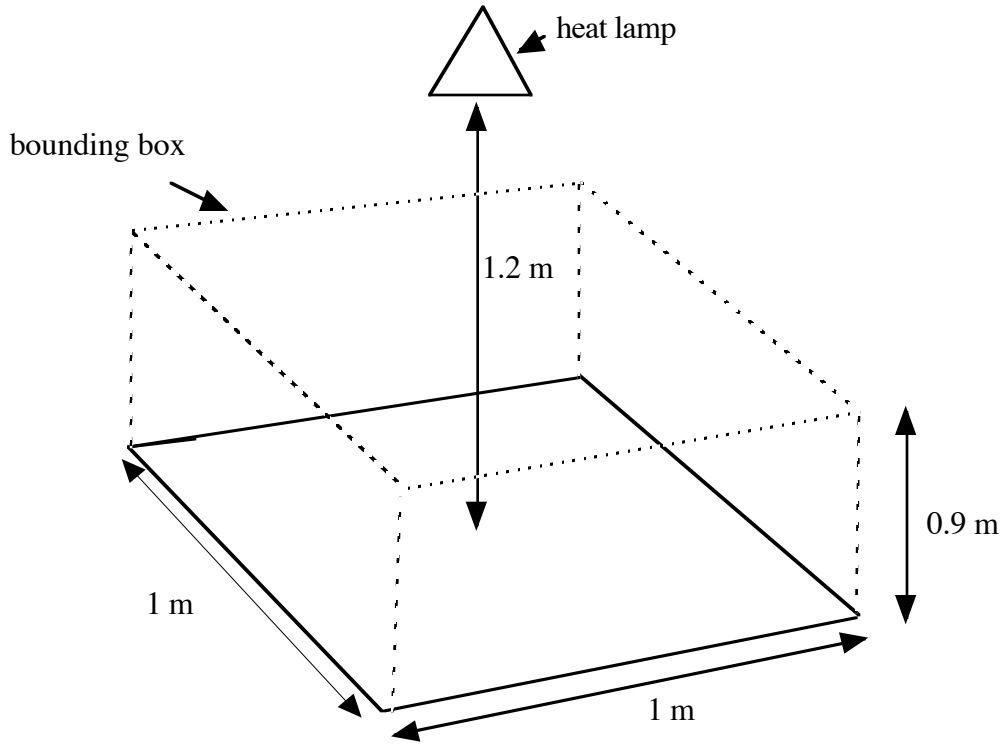

Figure 3. Diagram of the concentrator set-up.

Rules:

1. At the start of the event, teams are allowed 5 minutes to set up their apparatus. The heat lamp will be on during this time.
2. Teams will notify the judges when they are ready for the insertion of the water container. An event organizer will the place the water container into the apparatus. At this point, the 12 minute trial period will begin. The concentrator must remain undisturbed for the entire 12 minute period.
3. At the end of the 12-minute trial the water container will be removed from the apparatus and the temperature of the water will be taken. The water container will be weighed on a scale.
4. The score will be given by: Score = $m(\Delta T)d^{2.5}$ where m is the mass of water measured in grams, ΔT is the change in temperature measured in kelvin, and d is the vertical distance from the film can to the heat lamp measured in centimeters. The concentrator with the highest score wins the event.
5. In the unlikely event of a tie, the tied teams must present their calculations and design plans to the judges. The winner will then be determined by the thoroughness and physical accuracy of the presentation.

There will also be an award for the most innovative design as judged by the event organizers.

THE TWENTY FIFTH

UBC PHYSICS OLYMPICS

RULE BOOK

Clarification

March 8, 2003

The Concentrator (2 clarifications)

1. Rule clarification

Rule number 1 states: "1. ... teams are allowed 5 minutes to set up their apparatus. The heat lamp will be on during this time."

The reason the lamp is on in this rule is so that you can adjust your apparatus to be appropriately aligned etc. This does not mean you can be storing energy in it during setup to be used later. In particular, you can not store energy from the heat lamp before the 12 minute run time to be used during the run. This follows from number 4 under the Concentrator which states:

"4. ...water container is heated only by electromagnetic radiation from the heat lamp."

2. Score clarification

The formula for the score is Score = $m(DT)d^{2.5}$ based on a 12 minute run.

If you are within 5 cm of maximum distance and can boil water in less than 12 minutes, we will calculate your score based on the time taken to bring the water to boiling. The shortest time to boil the water (assuming more than 1 team does so) will win.

THE TWENTY FOURTH

UBC PHYSICS OLYMPICS

RULE BOOK

March 10, 2001

Financial sponsorship is provided by the Rex Boughton Memorial Fund.

The UBC Physics Olympics is organized by the Department of Curriculum Studies (Mathematics and Science Education) and the Department of Physics and Astronomy.

In the Spirit of Physics

The wording of each challenge in this year's rule book has been carefully prepared to define each task as precisely as possible. It is expected that all participants will produce solutions which comply with the task as defined. Normal physical interpretations will be applied to all the terminology used in defining the tasks. Those solutions which, in the opinion of the judges, do not comply with the spirit and intent of the challenge, will be disqualified. General questions regarding the challenges may be directed to the coordinators of the Olympics. The coordinators will accept inquiries which may help them to prepare for unusually good solutions to the problem.

Please direct all inquiries regarding the rules to K. Schleich or D. Witt at 822-6286 or via email to schleich@noether.physics.ubc.ca. This rule book will also be available on the world wide web at http://noether.physics.ubc.ca/.

General Rules

Each school may enter one official team made up of a maximum of five members. If space permits, each school may enter one additional, unofficial team in all events. Gold, silver and bronze medals will be awarded to the official teams scoring the highest, second highest and third highest aggregate scores. Both official and unofficial teams are eligible for these medals. In addition, gold, silver and bronze medals will be awarded to the official teams scoring the highest, second highest and third highest aggregate scores. The official teams must be designated at registration. All teams must enter all events. The events are scheduled so that it is possible for all teams to enter all events. All ties will be broken. A trophy will be awarded to the school sponsoring the official team achieving the highest aggregate score. Points scored by unofficial teams will not be included in the school championship aggregate.

TWO of the events require a pre-built structure. These entries must be checked in at the time of registration on the morning of the competition at which time they will be stored in a safe place until the time of the event.

Our Special Thanks to

Darren Peets	David Tsang	Allen Wootton	Don Witt
Richard Mar	Travis Beals	Kim Lam	

and to

Dr. Tom Tiedje, Head UBC Department of Physics and Astronomy

and all students of the Physics and Physics Engineering program who assist in the design organization and running of this Physics Olympics.

Update

Please note the correction to number of team members allowed: in particular, larger teams are welcomed, but only five or fewer members will participate in a given event. The following statement under General Rules has been added in the 2001 rule book.

A team will generally consist of five members. Smaller and larger teams are welcome, but only FIVE (or fewer) members of a team will participate in a given event, each wearing the team name tag. Gold, silver and bronze medals will be awarded to the official teams scoring the highest, second highest and third highest aggregate scores. In addition, gold, silver and bronze medals will be awarded to the official teams scoring the highest, second highest and third highest aggregate scores. All teams must enter all events. The events are scheduled so that it is possible for all teams to enter all events. All ties will be broken. A trophy will be awarded to the school sponsoring the official team achieving the highest aggregate score.

Back

The Loonie Car Event

This is a pre-built event which involves the design of a car that utilises the energy stored in two rubber bands to cover a 5.0 m course as quickly as possible while delivering a loonie to a target located 3.0 m from the starting line along the way.

Apparatus:

1. The total energy for moving the car can **only** come from the elastic potential energy stored in at most two size #32 rubber bands 3" x 1/8" (76 mm x 3.2 mm x 1.1mm). The two rubber bands will be supplied by the event organisers. They can be utilised in any way and do not have to remain in original condition. They do not need to be returned to event organisers.

2. The car must be constructed by the contestants themselves and should not consist mainly or exclusively of any sort of pre-purchased model kit or device. The car's mass must be less than or equal to 2 kg and its length in any direction must be no more than 0.50 m at all times.

3. The car must be designed to carry a loonie which it should try to drop at the appropriate time so as to land on a target marked on the floor. The loonie will be provided by event organizers and must be returned at the end of the event. The loonie cannot be modified in any way, for example by attaching other materials to it. The mechanism that controls the point at which the loonie is dropped must be self-contained within the car and must operate without any external intervention.

4. The car must have a 5 cm. by 5 cm. square rigid flag placed parallel to the direction of travel whose bottom edge is situated at a height of 10 cm. from the floor and whose front edge is even with the foremost part of the car. This flag must be directly attached to a rigid vertical flagpole or other rigid vertical piece of the car. This flag must remain attached in this manner at all times. Note that flag placement is important as it is used to time the car.

Rules: The rules for the event are as follows:

1. The car will have to move on a linoleum floor drag strip approximately 1 meter wide and 5 meters long. Cars exiting this drag strip through the sides will be receive a score based on distance traveled within the drag strip (see rule 6). The starting line will be at one end of the drag strip and the target will be centred in the drag strip at the 3.0 m mark. There will be an approximately 1 meter square area behind the starting line for set-up of the car, and there will be space behind the finish line in which contestants can stop the car.

2. To begin a run, the car must be placed at the starting line with no part extending beyond this line. When the event organizers indicate to do so, a team member releases the car. No external intervention is allowed after the release of the car.

3. The car must remain in contact with the ground at all times. All parts of the car except the loonie must cross the finish line 5.0 m distant from the starting line. In particular, note that no material or substance except the loonie can be left behind the car at any point during the run.

4. The timer will start when the flag on the car crosses the starting line and will stop when the flag crosses the finish line 5.0 m away. If the car does not cross the finish line in 30 seconds, the run will be declared over (See rule 6). External intervention is permitted to stop the car after it completely exits the drag strip to prevent undue damage. For example, a person can catch the car after it completely exits; positioning must be well clear of the finish line and is left to the discretion of the judges.

5. The score for a trial run is given by the formula Score = T x d where T is the time taken for your car to traverse the 5.0 m distance from the starting line to the finish line and d is the distance from the centre of the target to the centre of the final resting place of the loonie. The winning car will be the car with the lowest score.

6. If the car does not cross the finish line in 30 seconds, a **time** T = 10 + 150 / x (x is the distance in meters traveled by the car) will be used in calculating the score. The score calculated in this manner will be higher than that of any finishing car; that is, all cars that cross the finish line will place above a car that does not. The distance x will be the shortest distance from the front edge of the flag to the starting line. If the car does not drop the loonie, or drops the loonie outside the drag strip area, a **distance** d= 400 cm will be used in the score calculation.

7. Teams will be allowed two trials. A total time of 10 minutes is allowed for the setup and running of the two trials. The best score attained in the two trials will be used as the team score. In the event of a tie, the second score will be used to resolve the tie.

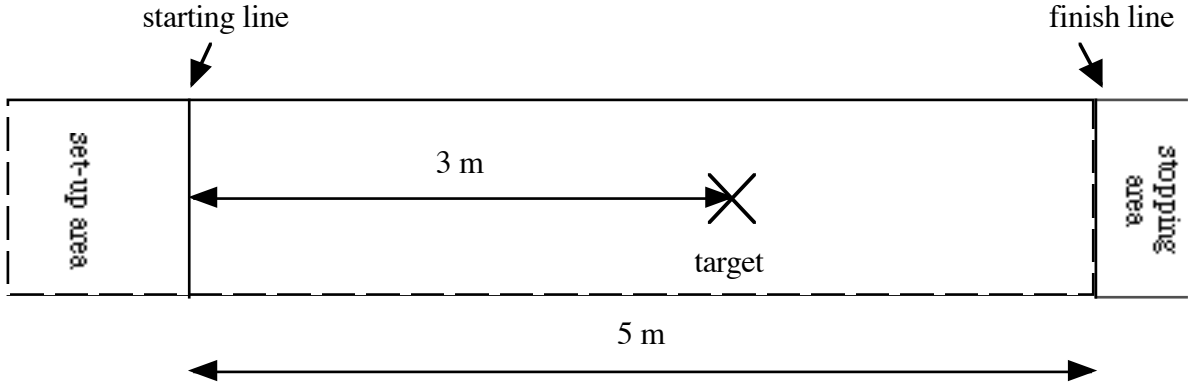

Figure 1: Top View of Drag Strip for Loonie Car Event

Intuitive Physics

Each team will be presented with simple experiments or simulations based on basic principles of mechanics, electricity and/or magnetism. Teams will be required to provide answers to questions based on these experiments or simulations. Answers to questions may involve simple calculations. The team with the most correct answers will win. Quality of answers involving explanations will be used to resolve ties.

Mystery Event

This event will involve solving a simple experimentally oriented problem or problems using logic and knowledge of basic principles of physics.

Micro Waves

This event involves an experiment that studies the basic properties of microwaves.

Rules:

1. Teams should bring a non-programmable calculator, pencil or pen, protractor, and a ruler. Teams are not allowed to bring or use any materials or equipment other than the above with the exception of the apparatus for the event.

2. The apparatus will consist of one or more sources that generate microwaves of constant frequency and one or more elements that will cause reflection, refraction, diffraction and or interference of these waves such as reflective surfaces and gratings. Students will also be provided detection equipment that will enable them to measure various properties of the waves.

3. Teams will be asked to measure properties of this system by devising an experiment that will do so using the given apparatus. Such an experiment may consist of a series of repositionings of the movable elements in the apparatus.

4. Teams will be judged on the accuracy of the value of their measurements. Ties will be resolved by answers to a set of of bonus questions.

The Black Monolith

This event involves teams to race to determine the circuit in the monolith. A simple example circuit for this event will be available at the Physics Olympics website, http://noether.physics.ubc.ca, in early March.

Materials: Multimeter
Paper
Ruler

Rules:

1. Contestants are not allowed to bring or use any materials or equipment other than those provided with the exception of pens or pencils for writing and a beta format videotape of 2001: A Space Odyssey as a lucky talisman.

2. Teams will be given a black box with several ports containing a fixed circuit consisting of some of the following components: a DC power supply, resistors, diodes, and switches. There will be no more than one component between any 2 ports.

3.The teams are expected to determine the circuit inside the black box and then draw it in a circuit diagram. There will be a sheet provided to the teams at the time of the event to outline some specific details of the circuit which will be essential to solving the problem. In addition teams may be asked to answer questions related to the circuit.

4. The winning team will be the team correctly answering all the questions and drawing the correct circuit. Part marks will be awarded to teams with partially correct answers. If two or more teams

receive the same score, the time they took to determine the correct solution will be used to break this tie.

Water Carrier

This is a pre-built event in which teams construct a rubber band powered crane which will lift and then lower a plastic Dixie cup filled with water. The crane that lifts and lowers the most water using the fewest number of rubber bands wins.

Apparatus:

1. The crane must be designed to lift, then lower, a plastic cup (Dixie 200 ml flexible party cup, 45 mm diameter base, 75 mm outer diameter top, 88 mm high) filled with water without spilling the water. The plastic cup and water will be provided by the event organizers.

2. The crane must utilize **only** the elastic potential energy stored in no more than 8 size #32 rubber bands (76 mm x 3.2 mm x 1.1mm) to accomplish its task. The rubber bands will be supplied by the event organisers. They can be utilised in any way and do not have to remain in original condition.

3. The crane consists of two parts: the body and the holder. The holder is the part that touches the cup. The body is the part that sits on the table (See figure 2). These two parts must be attached to each other only by string, fishing line or other thin flexible material.

4. The body of the crane must fit in a box of dimension 50cm high x 50cm wide x 50cm deep at all times. It must be designed so that it remains above the level of the table's top surface at all times during the event.

5. The holder must be designed so that the bottom of the cup is below all parts of the holder at all times during the event. The method of holding the cup must not alter it in any way; in particular any material used to secure the cup to the holder must be completely removable. The holder must never touch the ground during the event. The holder must allow the cup to be quickly freed for weighing after each trial.

6. The holder must not block water from flowing over the rim of the cup on any side at any time during the event. A simple test to see if the holder satisfies this requirement is that when a cup full of water is placed in the holder and the assembly is tilted in any direction, the water must freely spill out of the cup.

Rules:

1. The set-up for the event is illustrated in figure 2.

2. Each team will be allowed two trials. A successful trial consists of lifting and then lowering the cup. Each trial can take no longer than 1 minute.

3. Teams will be given a total time of 10 minutes to set up and run the two trials. Teams will be provided the plastic Dixie cup at the beginning of the 10 minute period.

4. When the team indicates that they are ready, an event organizer will provide them with water to fill the cup to the desired level. This level is chosen by the team. Note that nothing can be added to the cup except the provided water. Also the water itself must remain as provided.

5.The trial must start with the cup's bottom resting on the floor. The crane must lift the cup a minimum of 30cm as measured from the bottom of the cup to the floor than lower it back down to the floor. The trial must end with the cup at rest on the floor. No external intervention is allowed to control the crane nor is anyone allowed to touch the crane once a trial starts.

6. After the trial has ended, teams must remove the cup from the holder and give it to the event organizer. Any water on the outside of the cup must be dried off (with a paper towel) by a team member or members. The mass of the cup and water it contains as provided to the event organizer will be that used in the scoring. Observe that this means that spills of water during a successful trial or during removal of the cup by the team will lower the score for the trial.

7. The score for a successful trial will be given by the formula Score = M / N . M is the mass of both the cup and the water it contains. N is the number of rubber bands used in the crane. The best score of the two trials will be the final score. Ties will be broken using the second score and, if necessary, by the time that the cup remains above 30cm.

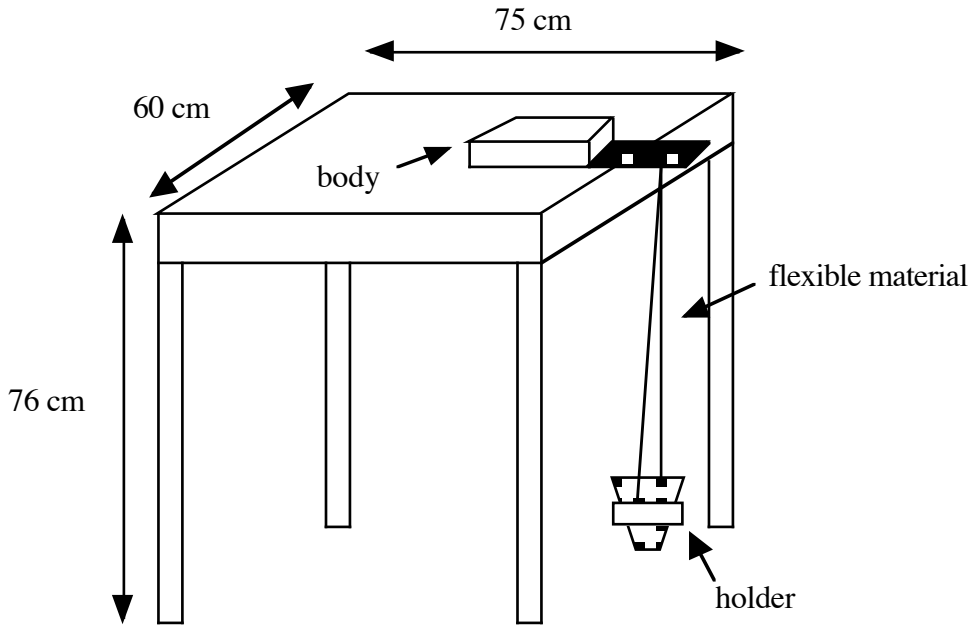

Figure 2: View of Set-up for the Water Carrier

Hint

Physics Olympics Black Monolith Problem

Black Monolith

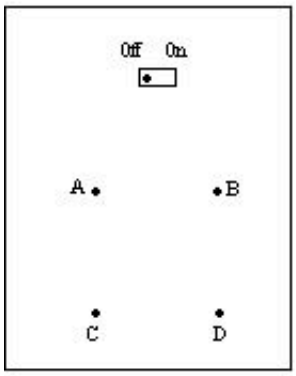

There are five resistors in the monolith. Their resistances are 1000 Ω, 2200 Ω, and 470 Ω. Measurements between the terminal posts A, B, C, and D give the following results:

Switch off:	Switch on:
A-B = 1444 Ω	A-B = 859 Ω
A-C = 844 Ω	A-C = 723 Ω
A-D = 1375 Ω	A-D = 1375 Ω
B-C = 1600 Ω	B-C = 363 Ω
B-D = 1444 Ω	B-D = 345 Ω
C-D = 844 Ω	C-D = 723 Ω

See if you can determine the circuit inside the box based on this information. The actual circuit is shown below.

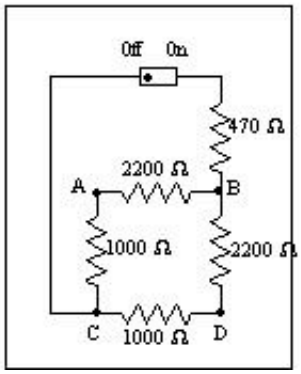

This page intentionally left blank

THE TWENTY THIRD

UBC PHYSICS OLYMPICS

RULE BOOK

March 4, 2000

Financial sponsorship is provided by the Rex Boughton Memorial Fund.

The UBC Physics Olympics is organized by the Department of Curriculum Studies (Mathematics and Science Education) and the Department of Physics and Astronomy.

In the Spirit of Physics

The wording of each challenge in this year's rule book has been carefully prepared to define each task as precisely as possible. It is expected that all participants will produce solutions which comply with the task as defined. Normal physical interpretations will be applied to all the terminology used in defining the tasks. Those solutions which, in the opinion of the judges, do not comply with the spirit and intent of the challenge, will be disqualified. General questions regarding the challenges may be directed to the coordinators of the Olympics. The coordinators will accept inquiries which may help them to prepare for unusually good solutions to the problem.

Please direct all inquiries regarding the rules to K. Schleich or D. Witt at 822-6286 or via email to schleich@noether.physics.ubc.ca. This rule book will also be available on the world wide web at http://noether.physics.ubc.ca/.

General Rules

Each school may enter one official team made up of a maximum of five members. If space permits, each school may enter one additional, unofficial team in all events. Gold, silver and bronze medals will be awarded to the official teams scoring the highest, second highest and third highest aggregate scores. Both official and unofficial teams are eligible for these medals. In addition, gold, silver and bronze medals will be awarded to the official teams scoring the highest, second highest and third highest aggregate scores. The official teams must be designated at registration. All teams must enter all events. The events are scheduled so that it is possible for all teams to enter all events. All ties will be broken. A trophy will be awarded to the school sponsoring the official team achieving the highest aggregate score. Points scored by unofficial teams will not be included in the school championship aggregate.

TWO of the events require a pre-built structure. These entries must be checked in at the time of registration on the morning of the competition at which time they will be stored in a safe place until the time of the event.

Our Special Thanks to the Event Designers:

Chris James Darren Peets Greg Orosi David Tsang
Jenny McKay Michael Manarovici Catherine Neish William Ono
Tarek Hamida Allen Wootton Don Witt Renee Boileau

and to

Dr. Tom Tiedje, Head UBC Department of Physics and Astronomy

and all students of the Physics and Physics Engineering program who assist in the organization and running of this Physics Olympics.

The 2000 Rule book

(All offical updates to the 2000 rulebook will be posted here.)

Pepsi Can Ferries

The object of this event is to build a rubber band powered boat out of no more than 4 standard Canadian Pepsi cans that will sail the racecourse described below in the fastest possible time with the maximum cargo of Canadian pennies.

Construction of boat:

1. The boat must be constructed only from the pieces of no more than 4 standard 375 ml aluminum Canadian-made Pepsi cans. You may cut, bend, crimp, puncture, etc. the three cans, but may not use any other material what-so-ever in the construction of the boat; e.g. no glue, staples, tape or other fasteners may be used.

2. The only source of energy used to power the boat must be supplied by up to 3 Alliance #33 rubber bands. The rubber bands are approximately 7 inches in circumference and will be supplied by the event organizers.

3. Both the length and the width of the boat must be less than 9 inches. The boat must have a part that is a minimum height of 4 inches above the water line. A 4 cm by 4 cm square flag cut from white 20 lb copy paper will be provided by the organizers and may be taped with a 2 cm long piece of cello tape to this part to ensure accurate timing of the event.

4. The boat must satisfy the requirements in rule 3 at all times during each race.

5. The boat must be designed to carry a cargo of no fewer than 2 Canadian pennies. Teams should bring sufficient pennies as cargo for their boat. Amount of cargo to be carried must be declared at check-in.

Racecourse: The course will consist of an 8 foot long by 3 foot wide by 5 inch deep trough filled with water. The starting gate will be placed 9 inches from one end of the trough and the finish gate will be placed 9 inches from the other end of the trough.

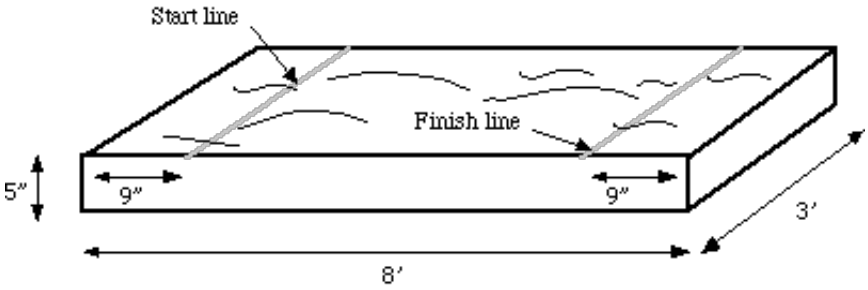

Figure 1: Trough for Pepsi Can Ferry Race:

Rules for racing and scoring:

6. Teams will have a maximum of 5 minutes to conduct two trials of their boat.

7. For each trial, the back end of the boat will be placed against the end of the trough nearest to the starting gate and released by a member of the school team. The boat may not push off from the sides or back of the trough or from the launching team member. The launcher must release the boat without providing it any momentum.

8. The boats are allowed to hit the sides of the trough and will not be disqualified if they take on water, assuming that they finish.

9. The timer will start when the boat crosses the starting gate and stop when the boat crosses the finish gate. The score will be computed by the formula

Score = t - (n-2)/6

where t is the time in seconds and n is the number of pennies transported by the boat across the finish line.

10. The lowest score obtained in the two trials will be the final score. Should there be a tie for the best score, another set of time trials will be run to break the tie. The judge's decisions will be final.

Additional information:

After the trials, contestants may fish any of their pennies lost overboard out of the trough.

Each boat will be weighed upon arrival to ensure that it is not made of more than the allotted 4 Pepsi cans.

Judges reserve the right to disassemble any boat to check its composition after the time trials are completed. If materials other than those from Pepsi cans are used, the boat will be disqualified.

Contestants should take care when building their boats. Pepsi cans are fun to work with but watch out for sharp edges!

Making Waves

This event involves an experiment that studies the diffraction and interference of waves.

Rules:

1. Teams should bring a non-programmable calculator, pencil or pen, protractor, and a ruler.
Teams are not allowed to bring or use any materials or equipment other than the above with the exception of the apparatus for the event.

2. The apparatus will consist of one or more sources that generate waves of constant frequency and one or more elements that will cause diffraction and or interference of these waves such as reflective surfaces and gratings. Students will also be provided detection equipment that will enable them to measure various properties of the waves.

3. Teams will have a maximum of 20 minutes to measure a property of this system by devising an experiment that will do so using the given apparatus. Such an experiment may consist of a series of repositionings of the movable elements in the apparatus.

4. Teams will be judged on the accuracy of the value of their measurement. Ties will be resolved by answers to a set of of bonus questions.

Balancing Act

The event consists of estimating the center of gravity of objects and placing them on a balance so as to level it.

Rules:

1. Teams should bring a non-programmable calculator, pencil or pen, and a ruler. Teams are not allowed to bring or use any materials or equipment other than the above with the exception of the apparatus for the event.

2. At the beginning of the event, each team will receive a box containing several objects of different shapes and sizes. Teams will also receive equipment that can be used to measure the weight of the objects.

3. A balance will be provided to each team for use in this event. This balance has the form of a bar that moves freely on a pivot. The exact configuration of the balance may include additional forces whose position, magnitude and direction are defined by the organizers. This configuration will be described to each team at the beginning of the event. The objects of different shapes and sizes are to ultimately be placed on this balance so as to level it.

4. Teams will have 15 minutes to determine each object's weight and center of mass. Using this information, teams will have to decide where to place each object on the balance so it will be level after all objects are placed. Teams will be required to record these measurements and calculations.

5. After the 15 minute period, each team will have two minutes to implement their solution using the actual balance. After the two minute period their solution will be tested by the judges and assessed for correctness.

6. The team that comes closest to leveling the balance with their solution and presents the most accurate measurements and calculations will win.

Intuitive Physics

Each team will be presented with simple experiments based on basic principles of mechanics, electricity and magnetism. Teams will be required to provide answers to questions based on these experiments. Answers to questions may involve simple calculations. The team with the most correct answers will win. Quality of answers involving explanations will be used to resolve ties.

Mystery Event

This event will involve solving a simple experimentally oriented problem or problems using logic and knowledge of basic principles of physics.

Crash Test Dummies

<u>Purpose:</u>

To build a vehicle that transports **and** protects its passengers (two large grade A eggs) as they travel down an inclined ramp, across a length of linoleum floor and crash into a concrete block wall. The winning vehicle will be determined by the mass, length, and final velocity; faster, lighter, smaller vehicles will receive higher scores.

Construction of vehicle:

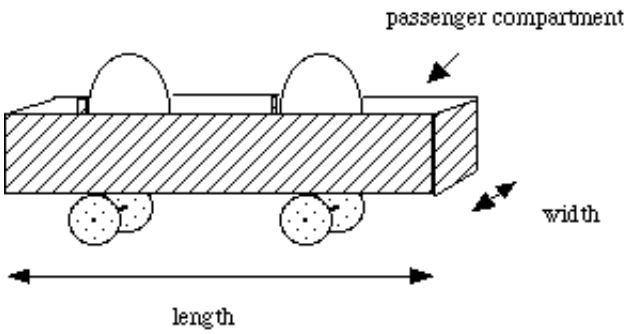

Figure 2: Vehicle for Crash Test Dummies

1. Teams are allowed to bring three vehicles; two trial vehicles and a backup vehicle. The vehicles to be used in the event should all be constructed from the same design and be as identical to each other as possible.

2. The vehicle, including its passengers, must be no more than 15cm in height at any point. The width of the vehicle must not exceed its length. The length of the vehicle must be no greater than 30cm. The vehicle must be designed such that its width, length and height do not change at any time during the competition before collision with the concrete block wall.

3. The vehicle must be constructed exclusively from wood and paper except for the wheels, axles and the means of their attachment to the passenger compartment. Glue, staples, small nails and any similar fasteners may be used in the construction for holding parts together. The wheels, axles and the means of attachment may be made from any material. The vehicle must be made by the contestants themselves and should not consist mainly or exclusively of any sort of pre-purchased model kit or device.

4. The vehicle must carry 2 large grade A eggs. The judges should be able to see the top half of each egg at all times during the run; i.e. there is no material, excluding air, between the egg and the judges except for their "seat belts".The eggs must sit freely in the vehicle before their "seat belts" are fastened and be able to be easily placed in and removed out of the vehicle. The test of this is if the vehicle is tipped upside down, the eggs will immediately fall out of their “seats” unless restrained by the “seat belts”.

5. Both "seat belts" restraining the eggs must be made from one 40 cm length of string. This string will be provided by the judges. The "seat belts" must not be directly fastened to the eggs by any means including glue or tape.

6. The total energy for powering the vehicle can only come from the gravitational potential energy of the vehicle itself.

Track:

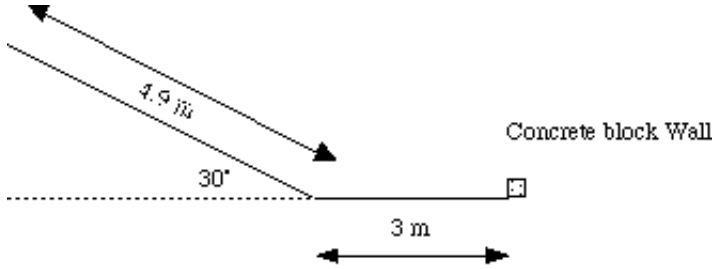

Figure 3: Side View of Track for Crash Test Dummies

The track consists of a ramp, a flat and a concrete block wall. The ramp will be constructed using a 1 x 10 plank of wood 16 feet long (Note the measured dimensions are approximately 2 cm by 24 cm by 4.9 m. The difference in dimensions is because lumber is sold by its size before planing.) The ramp is inclined at a 30 degree angle. On each side of the plank a 1 x 4 board will be attached which will extend 7 cm above the running surface to prevent the vehicles from sliding off. The bottom of the ramp will be beveled so that there will be no drop from the plank to the flat, just a sudden, 150 degree transition.

The flat will consist of linoleum flooring. The distance from the bottom of the ramp to the concrete block wall across this flat will be 3m. The area of flat between the end of the ramp and the concrete block wall shown in figure 4 is the bounding box.

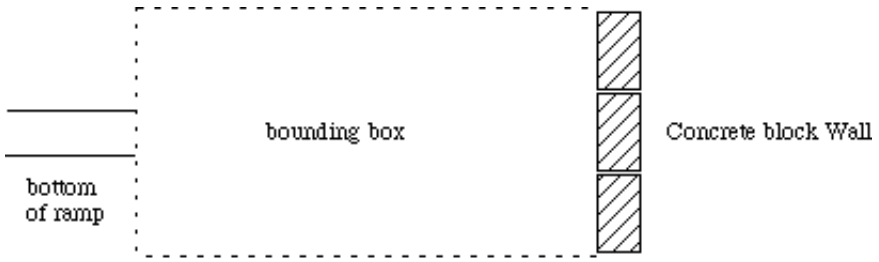

Figure 4: Top View of Track for Crash Test Dummies

The concrete block wall will be faced with a bank of three side by side concrete blocks, each approximately 7.5 inches tall and 15.25 wide (19 cm tall and 38 cm wide). The block wall will be centered on the ramp. These blocks will be held in position.

<u>Crash Trial Rules:</u>

7. Teams will be provided with four uncracked grade A eggs at the beginning of the event.

8. Teams will have a maximum of 8 minutes to construct the "seat belts", secure the passengers and complete **two** trial runs. Teams may use a different one of their identical vehicles for each run.

9. Teams may place the vehicle at any point on the ramp at least 3 meters from the bottom (as measured along its length of the ramp) to start the race. Teams must tell the judges when they are ready to begin the trial. When the judges signal that they may do so, the team will release the vehicle from rest.

10. No external human intervention is allowed to stop, align, or redirect the vehicle during the run. The vehicle

must begin and end the race in one piece (this does not include collision related breakage).

11. The vehicle must remain in contact with the ramp and floor at all times during its run. The vehicle must not leave the bounding box indicated in Figure 4. The vehicle must hit the concrete wall head-on; i.e. the side or any other part of the car except the front must not make first contact with the wall. The vehicle must not damage the ramp or the floor . Any vehicle that does not satify these restrictions will be disqualified.

12. After the run, the eggs must be removed by the teams themselves in the presence of a judge for inspection. The judge will evaluate the condition of both eggs and place them in one of three categories - intact, cracked, or broken. All eggs must be returned at the end of the two runs.

Scoring:

13. The score for each run is computed by

$$\text{Score} = e \times b \times [\text{velocity}] \div [(\text{mass}^2)(\text{length}^2)]$$

where e is the egg coefficient : 2 if both eggs are completely intact, 1 if one or both eggs are cracked and 0 if one or both are broken, and b is the block factor: 2 if the vehicle first hits the center block of the wall, 1 if it hits either of the side blocks. The velocity will be computed by timing the car over a fixed distance on the flat that ends near the concrete block wall.

14. The team score is the larger of the scores for the two runs. The winning team will have the largest score.

Back

2000 Olympics Rule Book Update

Crash Test Dummies

3. The vehicle must be constructed exclusively from wood and paper except for the wheels, axles and the means of their attachment to the passenger compartment. Glue, staples, small nails and any similar fasteners may be used in the construction for holding parts together. The wheels, axles and the means of attachment may be made from any material. The vehicle must be made by the contestants themselves and should not consist mainly or exclusively of any sort of pre-purchased model kit or device.

Clarification

Cardboard is not paper. This includes all forms of cardboard. Thus you may not use any manufactured cardboard in your cart. However, you may make your own similar structures from paper (copy paper, newspaper, tissue paper, etc) using glue and tape. For example you can make a corrugated structure by attaching a finely folded piece of paper to a flat piece.

The Fifth Annual Physics Olympics Open Event

This year, we are again pleased to announce a completely optional event designed for the participation of those people who accompany the official teams to the Physics Olympics. This event is not an official Physics Olympics event and is intended for teacher teams, informal B teams (those not participating in the regular Physics Olympics events) and any other informal teams who wish to try it. No trophies will be awarded in this event, but the names of the top finishers will be announced at the awards ceremony. This event will be run at announced periods all day; anyone who wishes to participate can do so by showing up at one of these times. This year, we are proud to announce

The Paper Tower

The object of this event is to build a paper tower that will support a standard laboratory 500 gram mass. The tower must be self supporting and unattached to floors, walls, or any other nearby objects. Five sheets of 20 lb, 8.5” x 11” photocopy paper and 30 cm of 1/2” masking tape will be provided by the event organizers for the construction of the tower. No other materials may be used in the completed tower but other materials may be used as forms or guides to aid in its construction. Towers must be completed in a ten minute time period.

On the completion of the tower, the builders will place a standard laboratory 500 gram mass on the highest point of the tower.

This mass cannot be attached to the tower by tape or by any other means.

The completed tower must stand supporting this 500 g mass for one minute from a starting time indicated by the builders.

The builders of the tallest successful tower will be the winners. If the tower collapses or the mass falls off at any time during this minute, however, the tower will be disqualified regardless of its height, artistic merit, or any other attributes.

Back

This page intentionally left blank

1999 rulebook

updates

The Great Paper Tower Event

Objective: To build a paper tower on site in a period of 10 minutes that can hold as much weight as possible for a time of one minute. Teams will supply the platform, weights and any additional guide structure used in testing the tower.

Materials: The teams will be required to bring the following supplies:

1) Standard paper staplers with standard staples.
(Staples with 1/2" crown, 1/4" leg, chisel point.)
2) Scissors.
3) A platform and test weights.
4) A guide structure (optional).

At the beginning of the event, each team will be provided with 10 sheets of 20 lb photocopier paper. Towers are to be built with this paper only.

Construction:

1) The tower must be constructed during a 10 minute period at the beginning of the event. It must be constructed from no more than 10 standard $8^1/_2$" x 11" pieces of 20 lb photocopier paper and standard staples. No other materials may be used in its construction. Any number of staples may be used, but staples must serve a fastening function only; specifically, every staple used must pierce some piece of paper provided by event organisers.

2) Teams may bring a "blueprint" of their tower design to aid in the construction, but no piece of the blueprint may be incorporated into the tower itself.

3) The tower must be between 39.5 cm and 40.5 cm in height. The finished tower must fit inside a rectangular box with a 30 cm x 30 cm square base and 40.5 cm in height.

4) The tower must be strong enough to support the chosen weight for 1 minute.

Rules for Event:

5) The platform, test weights and optional guide structure must be checked-in as a prebuilt. The total weight of platform and weights at check-in time must be specified by the contestants.

6) Teams are required to bring a platform and weights for use in testing their tower. A platform is a flat board or any other flat rigid material. It must fit flat into a 50cm by 50cm square. It must be designed so that when sitting on top of the tower, its flat bottom surface is parallel to the floor. The platform and weights may be one object. The weights can be of any number, size or composition.

7) The tower will be tested by positioning it on a flat linoleum floor, placing the platform on its top, then placing weights on top of the platform. Teams will be responsible for placing all weights. All weights must remain entirely on top of the platform with no part hanging below it at all times.

8) Teams may bring a guide structure to assist in maintaining the levelness of the platform while placing weights. The device may have any configuration and may touch the platform during the loading phase. **However it must not touch the platform, tower or weights at any time during the one minute testing period.** If any contact is made, the trial will receive a score of zero.
Such a device is illustrated below.

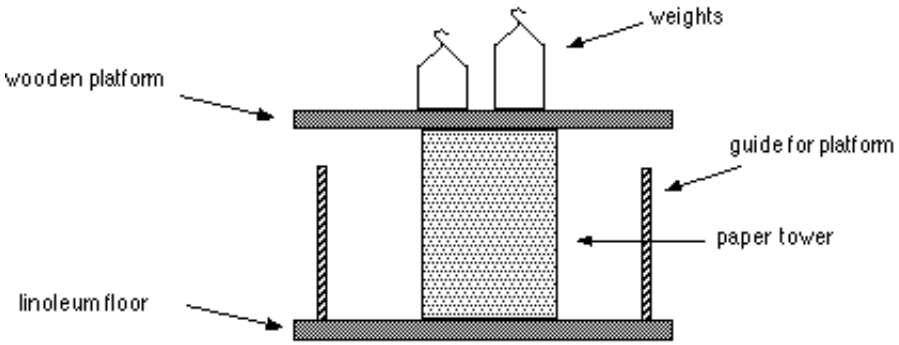

The wooden platform is above guides that serve to keep it from tilting or sliding off too much to the side during weight placement.

9) Teams will have 8 minutes to set up their tower and demonstrate that it will hold the selected weights for one minute. Contestants are allowed a maximum of two trials in the 8 minute period.

10) Teams must notify the judge when they are ready to begin each trial. The judge will indicate to the team when to begin.When a team has completed the addition of weights, they must indicate this to the judge who will then begin timing one minute.

11) The tower must support the weights for one minute. At the end of the one minute period, the lowest point of the platform must be at least 35 cm above the floor. Towers that collapse below this height during the addition of weights or before one minute is up receive a score of zero for that trial. Towers that do not collapse but whose platform's lowest point is less than 35 cm high during or at the end of the timed minute also receive a score of zero.

12) Teams may not modify their tower between trials. Teams may change the amount of weight supported by their tower for the second trial.

Scoring:

The team's score will be the maximum of the score for each of their two trials. It is computed by

$$\text{Score} = \frac{\text{total weight supported}}{(11 - \text{number of unused sheets of paper returned})^2}$$

where the total weight supported is the sum of the weight of the platform and all weights placed on it. The maximum score wins. Ties if any will be broken by considering the score for the other trial.

Mystery Event

This event will involve solving a simple experimentally oriented problem or problems using logic and knowledge of basic principles of physics, especially those involving magnetic fields, coils and induction.

Intuitive Physics

Each team will be presented with several simple computer simulations or experiments based on basic principles of mechanics, electricity and magnetism. Teams will be required to provide answers to questions based on these simulations or experiments. Answers to questions may involve simple calculations. The team with the most correct answers will win. Quality of answers involving explanations will be used to resolve ties.

Musical Mayhem

This event requires you to use your knowledge of waves to construct a simple stringed musical instrument.

Rules:

1) You should bring a non-programmable calculator and pencil.

2) Assorted material such as thin wire, weights and all other materials needed for this event will be provided by the invigilators. No other materials may be used.

3) You will be required to construct an musical instrument that has a specified property or properties. You will also be required to carry out calculations to aid in the design of this instrument.

4) The score for this event will be based both on the correctness of the calculations and the success of the construction and design of the musical instrument. Answers to a set of questions regarding the physics of music may be used to resolve ties.

5) This is not an impossible exercise. So don't despair if you do not know how to solve it before you get to the event. Also, the invigilators are a really fun bunch of people, so don't be afraid to ask questions.

The Carnival Thrill Ride

This is a prebuilt event which requires the design of a race track for a car such that it completes the course in minimum time.

Apparatus:

1) The part of the apparatus that will cross the timing gates is called the car. The part of the apparatus that guides the car from the start line to the finish line is called the track. The car and the track must be designated by the contestants before the beginning of the event.

2) The total energy for powering the car can **only** come from the gravitational potential energy of the car itself.

3) The apparatus must be constructed by contestants themselves and should not consist mainly or exclusively of any sort of pre-purchased model kit or device. For example, it cannot consist of Hot Wheels™ track or any other commercially made track.

4) The apparatus (that is the track and the car) must fit in a bounding box that is 1.2m in height, 1.75m in length and 0.5m in width at all times. The car itself must fit into a 10cm by 10cm by 10cm box at all times. Contestants must be able to slide/place their apparatus into the bounding box from either (or both) the front and back plane so as not to disturb the timing gates.

5) The track must be designed to not block the laser beams used in the timing gates at any time during the race. However, it must carry the car past both timing gates at a height guaranteed to trigger them. The start gate laser beam will be positioned at a height of 1m a distance 15cm in from the back plane of the bounding box as shown in Figure 2. The finish gate laser beam will be positioned at a height of 10 cm a distance of 10 cm from the front plane of the bounding box.

6) There must be one gap on the track. This gap must be 30cm wide horizontally. The height of the track the car lands on must be 5cm higher than that of the track the car takes off from as shown in Figure 3. This means that the car must jump, not drop, over the gap. The gap must be positioned at least 30 cm horizontally away from the finish timing gate laser beam and 30cm horizontally away from the start timing gate laser beam.

Rules:

7) Teams will have a maximum of 8 minutes to set up their apparatus and complete three trial runs. Adjustments can be made on the apparatus between each trial run.

8) A designated team member will release the car from rest to begin each trial run. The height that the car is released from must be such that the entire apparatus obeys rule 4) at time of release. The car must be released from a position behind the starting timing gate laser beam.

9) No external human intervention is allowed to stop, align or redirect the car during a run. The car must begin and finish the race in one piece. That is, all parts of the car must finish the race together. The car must remain on the track except when jumping over the gap. It must remain in the bounding box at all times during the race until it crosses the finish timing gate laser beam.

10) Apparatus that somehow manages to damage the floor or timing gates will be disqualified.

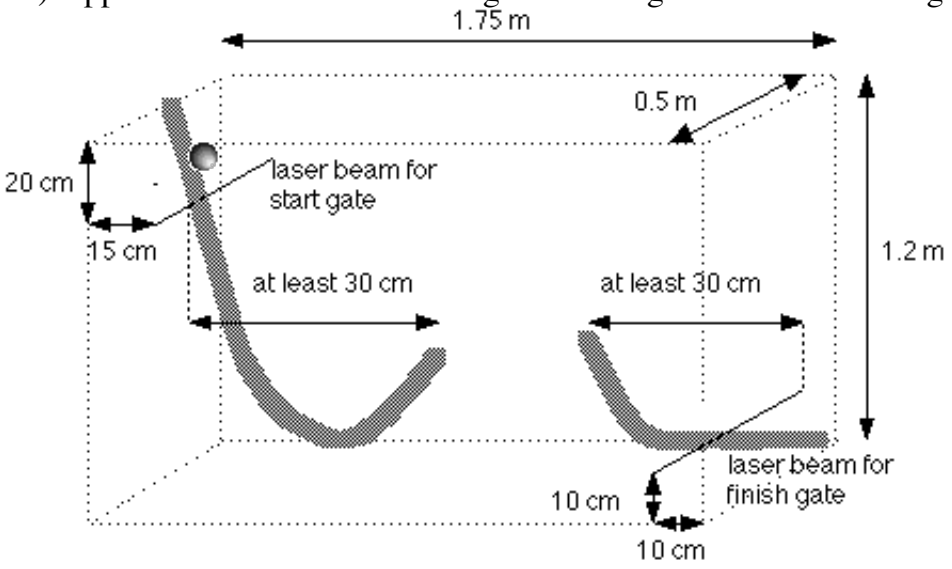

Scoring:

The score for a successful trial run will be determined by the time the car takes to get from the start gate to the finish gate. Cars that do not finish the race (e.g. fly off the track) will be given a penalty time of 30 seconds.

The best two out of the three trial runs will be summed to find the score for this event. The lowest score, corresponding to the fastest track, will win.

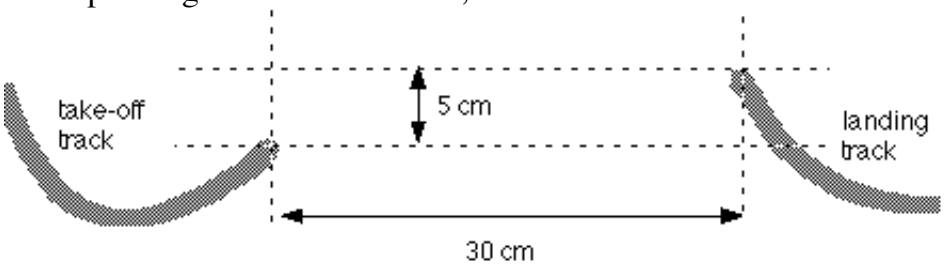

Balancing Act

The event consists of estimating the center of gravity of objects and placing them on a balance so as to level it.

Rules:

1) Teams should bring a non-programmable calculator, pencil or pen, and a ruler. Teams are not allowed to bring or use any materials or equipment other than the above with the exception of the apparatus for the event.

2) At the beginning of the event, each team will receive a box containing several objects of different shapes and sizes. Teams will also receive equipment that can be used to measure the weight of the objects.

3) A balance will be provided to each team for use in this event. This balance has the form of a bar that moves

freely on a pivot. The exact configuration of the balance will be described to each team at the beginning of the event. The objects of different shapes and sizes are to ultimately be placed on this balance so as to level it.

4) Teams will have 15 minutes to determine each object's weight and center of mass. Using this information, teams will have to decide where to place each object on the balance so it will be level after all objects are placed. Teams will be required to record these measurements and calculations.

5) After the 15 minute period, each team will have two minutes to implement their solution using the actual balance. After the two minute period their solution will be tested by the judges and assessed for correctness.

6) The team that comes closest to leveling the balance with their solution and presents the most accurate measurements and calculations will win.

All offical updates to the 1999 rulebook will be posted here.

No Changes or Updates in the rules but 2 comments

Comments on The Carnival Thrill Ride

1) A ball does qualify as a car.

2) Part of Rule 9 states:

"...The car must remain on the track except when jumping over the gap. It must remain in the bounding box at all times during the race until it crosses the finish timing gate laser beam."

This means that the car cannot be airborne as it crosses the finish line; in particular it must be in contact with the landing track except while in the 30 cm gap. To be precise, the car must land no more than 10 cm from the starting point of the landing track..

Also, air does not qualify as track.

Back

This page intentionally left blank

THE TWENTY FIRST

UBC PHYSICS OLYMPICS

RULE BOOK

March 7, 1998

Financial sponsorship is provided by the Rex Boughton Memorial Fund.

The UBC Physics Olympics is organized by the Department of Curriculum Studies (Mathematics and Science Education) and the Department of Physics and Astronomy.

In the Spirit of Physics

The wording of each challenge in this year's rule book has been carefully prepared to define each task as precisely as possible. It is expected that all participants will produce solutions which comply with the task as defined. Normal physical interpretations will be applied to all the terminology used in defining the tasks. Those solutions which, in the opinion of the judges, do not comply with the spirit and intent of the challenge,

will be disqualified. General questions regarding the challenges may be directed to the coordinators of the Olympics. The coordinators will accept inquiries which may help them to prepare for unusually good solutions to the problem.

Please direct all inquiries regarding the rules to K. Schleich or D. Witt at 822-6286 or via email to olympics@noether.physics.ubc.ca. This rule book will also be available on the world wide web at http://noether.physics.ubc.ca/.

General Rules

Each school may enter one official team made up of a maximum of five members. If space permits, each school may enter one additional, unofficial team in all events. Gold, silver and bronze medals will be awarded to the official teams scoring the highest, second highest and third highest aggregate scores. Both official and unofficial teams are eligible for these medals. In addition, gold, silver and bronze medals will be awarded to the official teams scoring the highest, second highest and third highest aggregate scores. The official teams must be designated at registration. All teams must enter all events. The events are scheduled so that it is possible for all teams to enter all events. All ties will be broken. A trophy will be awarded to the school sponsoring the official team achieving the highest aggregate score. Points scored by unofficial teams will not be included in the school championship aggregate.

TWO of the events require a pre-built structure. These entries must be checked in at the time of registration on the morning of the competition at which time they will be stored in a safe place until the time of the event.

Our Special Thanks to the Event Designers:

Ioana Lupu Charles Lee Paul Pereira Owen Robertson
Allison Teasdale Doug Thiessen Jenny Riecken Bethany Jackson Elizabeth Nethery Lilian Fan Adrien Desjardins Don Witt

and to

Dr. Tom Tiedje, Head UBC Department of Physics and Astronomy

and all students of the Physics and Physics Engineering program who assist in the organization and running of this Physics Olympics.

The High Jump

This event will involve the construction of a simple mechanism that will jump, fling or otherwise transport itself over a wall.

Materials:

The jumper can be made **only** of the following materials:

pieces of wood, for example popsicle sticks
string

rubber bands (of any type)
lead fishing weights, washers or laboratory weights
glue

Rules for Construction of the Jumper:

1. The jumper must be pre-built and checked in upon registration.

2. The jumper must carry out its jump using only the potential energy stored in it, either in the elastic potential energy of the rubber bands or in the mechanical potential energy of its initial configuration.

3. The jumper must fit in a box that is 20x20x20 cm immediately before release and immediately upon landing.

The event designers will provide two high jumps. One consists of a 1 meter by 1.5 meter launch area of hard linoleum floor, a 1 meter high wall and a 1.5 meter by 1.5 meter landing area covered in 1 inch polystyrene foam. The other consists of a 1 meter by 1.5 meter launch area of hard linoleum floor, a 2 meter high wall and a 1.5 meter by 1.5 meter landing area covered in 1 inch polystyrene foam.

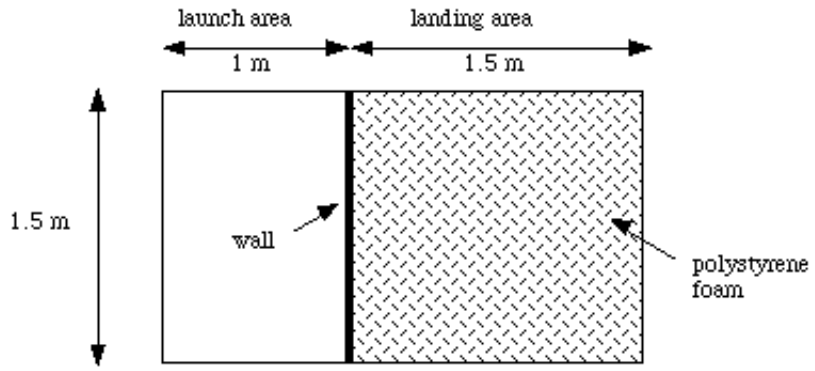

Figure 1. Diagram of a high jump.

Rules:

4. Teams will have a maximum of 8 minutes to set up their jumper and complete three trial jumps. Adjustments can be made on the jumper between trial jumps. These adjustments can include changing the weight of the jumper. A different height wall can be attempted with each jump.

5. Teams must notify the judges in advance of each jump which wall they will attempt to clear and wait for the judges indication to proceed.

6. The jumper must be in contact with the floor and entirely in the launch area at time of launch. The entire jumper must transport itself over the wall; no part of the device must be left on the original side of the wall. It must remain in one piece at all times, including at landing.

7. The jumper must not touch the wall at any point including the top at any time during its jump. The jumper must also remain in or above the chosen high jump set-up at all times for a trial jump to be successful.

8. Only one contestant is allowed to aim and release the jumper. However, this human intervention cannot supply external energy to the jumper during launch. For example, the contestant cannot throw the jumper over the wall.

9. The ceiling of the event area is at a height of approximately 4.2 meters from the floor. Jumpers that hit the ceiling at any point during their jump or damage the hard linoleum floor will be disqualified.

10. If desired, teams may bring materials to cover part or all of the landing area to assist in stopping their jumper. These materials must be no more than 5 cm thick, must be easily removable and must remain entirely in the 1.5 meter by 1.5 meter landing area.

11. The score for a successful jump will be given by wh^2 where h is the height of the wall and w the weight of the jumper at the time of the successful jump.

12. The best jump out of the three trial jumps will be the final score for this event. The highest score will win. Ties, if any will be broken by considering the scores of the other two trial jumps.

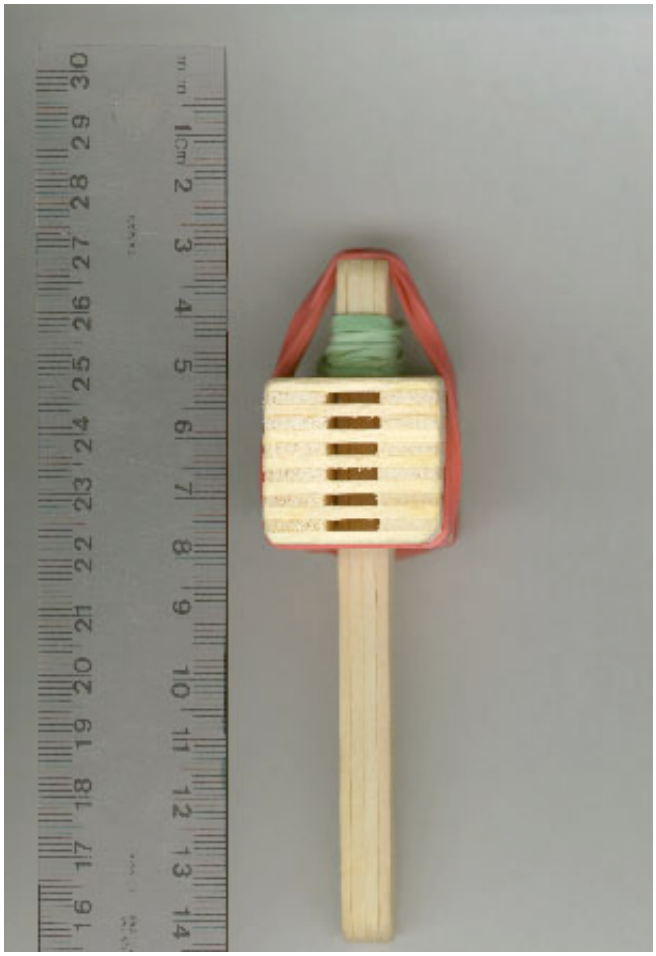

Figure 2. Picture of a jumper made of popsicle sticks and rubber bands.

Mystery Event

This event will involve solving a simple experimentally oriented problem or problems using logic and knowledge of basic principles of physics.

Intuitive Physics

Each team will be presented with several simple demonstrations, simulations or experiments based on basic principles of mechanics, electricity and magnetism. Teams will be required to provide answers to questions based on these demonstrations, simulations or experiments. Answers to questions may involve simple calculations. The team with the most correct answers will win. Quality of answers involving explanations will be used to resolve ties.

Do You See what I See?

How did Galileo observe the planets? How do biology students see microorganisms? In this experiment you will have to demonstrate your theoretical and applied aptitude in optics and build a simple optical instrument.

To prepare for this event, you should know the thin lens equation and how to use it:

$$\frac{1}{i} + \frac{1}{o} = \frac{1}{f}$$

where i is the distance to the image from the lens, o is distance to the object from the lens and f is the focal length of the lens. You

should understand focal lengths, magnification, virtual and real images, and know the characteristics of converging and diverging lenses.

Rules:

1. You should bring a non-programmable calculator and pencil.

2. Assorted lenses, an optical bench and all other materials needed for this event will be provided by the invigilators. No other materials may be used.

3. You will be required to construct an optical instrument that has a specified property or properties. You will also be required to carry out calculations using the thin lens equation to aid the design of this instrument.

4. The score for this event will be based both on the correctness of the calculations and the success of the construction and design of the optical instrument.

5. This is not an impossible exercise. So don't despair if you do not know how to solve it before you get to the event. Also, the invigilators are a really fun bunch of people, so don't be afraid to ask questions.

The Amazing Capacitor

Capacitors are electrical devices that can be used to store charge. This event will explore properties of simple capacitors such as a parallel plate capacitor.

Rules:

1. You are not allowed to bring or use any materials or equipment other than those provided with the exception of pens or pencils for writing.

2. Materials such as aluminum foil, paper and plastic will be provided for constructing simple capacitors. You will also be given a simple circuit that will allow them to easily measure the capacitance of the capacitors they construct.

3. You will be expected to do an experiment to determine a property or properties of the capacitors you build. Your score will be based on the accuracy of these measurements and the description of the experiment.

4. Don't worry, more specific directions and information will be given at the time of the event. With these directions you will be able to figure out what to do. In addition, there will be friendly, helpful invigilators at the event to make sure you have no trouble using the circuit.

To prepare for this event, you should familiarize themselves with the basic physics of capacitors.
If you want to practice further, you can build a simple parallel plate capacitor in the following way. Take two 8 by 10 inch sheets of aluminum foil. Carefully sandwich a piece of 8 1/2 by 11 inch paper between these two sheets, making sure that the aluminum foil sheets do not touch each other. Attach a wire to each of the two aluminum sheets using alligator clips. Presto, you now have a simple parallel plate capacitor with a capacitance of a few nanofarads.

The Stationary Derrick

Contestants will build a derrick that will support a stationary load as far from the edge of a table as possible.

Apparatus:

Definition of terms used in rules:

Table --A flat stable surface for the support of the derrick.
Derrick -- A structure that both rests on a table and extends beyond its edge hold the load.
Load-- A detachable mass that is supported by the derrick some distance from the table.
Base -- portion of the derrick in contact with the table's surface.

Note that event designers reserve the right to use an object such as a lab bench as the table.

1. The derrick and load must be pre-built and checked in upon registration.

2. The derrick must be constructed by the contestants themselves and should not consist mainly or exclusively of any sort of pre-purchased model kit or device. No construction kits (e.g. Meccano, Constructs, Kinex, etc) may be used.

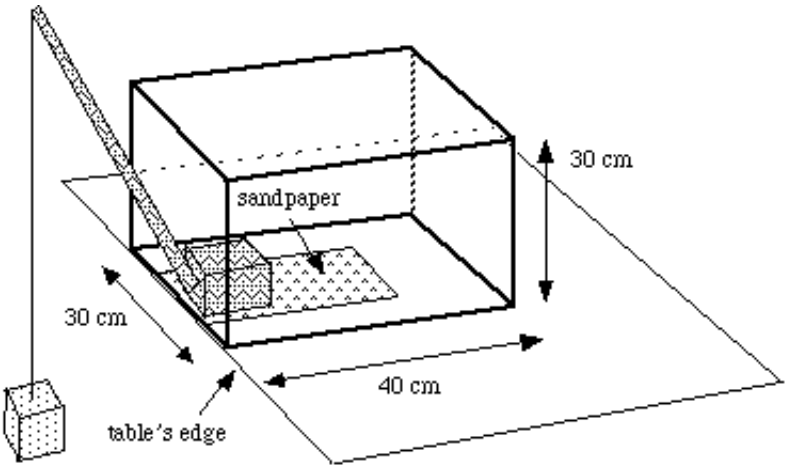

Figure 3. Diagram of the table illustrating the bounding box and a simple derrick.

3. Each team must supply their own load. It may consist of standard laboratory weights and may be of any shape, dimension or material so long as it complies with all other rules. The load must be readily detachable from the derrick for the purpose of scoring.

4. Both the derrick and the load must have a weight related to their mass by the usual formula,

$$W = mg$$

where W is their weight, m is their mass and g is the gravitational acceleration.This relation must hold at all times during the event. In addition, the weight cannot change during the event. Note that this rule restricts the composition and design of the derrick and load. For example, it rules out use of buoyant materials such as helium filled balloons.

5. The part of the derrick located directly above the table must be able to fit within a box positioned as in figure 3. This box extends 30 cm above the table's horizontal surface and 40 cm back from the table's edge. It is 30 cm wide. The part of the derrick extending beyond the table's edge can be any height and width.

6. No part of the derrick may extend below the plane defined by the table's horizontal surface. Note that this rule applies not only to the part of the derrick above the table but also to the part extending beyond the table's edge.

7. The base of the derrick may not have dimensions larger than 10cm x 10cm square.

8. The load must be supported by a single strand of string,wire or fishing line connected to the derrick at a single point. The uppermost point of the load must be at least 10 cm below the plane defined by the table's horizontal surface. The lowermost point of the load should be no more than 50 cm below this plane to ensure that it does not touch the floor. Its width must be such that it does not extend under the edge of the table.

Rules:

9. The contestants will be provided with a table for the trial. Its surface will be covered with one 228 mm by 279 mm sheet of 80 grit garnet paper backed sandpaper secured with masking tape. The sandpaper will extend to the edge of the table.

10. No part of the derrick may be attached either temporarily or permanently to the table. Moreover, the table's horizontal surface must provide the sole source of support for the derrick; for example, the it cannot be supported by the floor, ceiling or vertical edges of the table's top.

11. Only one trial will be permitted. Four minutes will be designated for the setup of the derrick. At the expiration of the four minutes or at the completion of the derrick's preparation, contestants will notify the judges they are ready to begin.

12. The trial period will begin when the judges indicate that they are ready and the contestants have released both the derrick and the load. The derrick must remain stationary, within the bounds described in rule 5, without collapsing, for the trial period of one minute. During the period no external intervention is allowed to adjust, steady, or support the derrick. A collapse of the derrick or intervention before the trial period has elapsed will result in a disqualification.

Scoring:

13. The score will be given by the formula

$$\frac{Fd}{m}$$

where F is the weight of the load, d is the horizontal distance from the table edge to the thin medium attaching the load to the derrick in and m is the mass of the derrick.

The Third Annual Physics Olympics Open Event

This year, we are again pleased to announce a completely optional event designed for the participation of those people who accompany the official teams to the Physics Olympics. This event **is not** an official Physics Olympics event and is intended for teacher teams, informal B teams (those not participating in the regular Physics Olympics events) and any other informal teams who wish to try it. No trophies will be awarded in this event, but the names of the top finishers will be announced at the awards ceremony. This event will be run at announced periods all day; anyone who wishes to participate can do so by showing up at one of these times. This year, we will revisit the 1994 event,

Rubber Band Powered Boat Race

The object of this event is to construct a polystyrene boat powered by elastic bands that covers the racecourse described below in the shortest amount of time.

Materials: Contestants are requested to bring

A pair of scissors.
A stapler with staples.

Manual cutting tools appropriate for work on polystyrene such as knives and files
One 8.5" by 11" piece of paper for notes/blueprints.

Teams will be supplied with the following materials by the event organizers:

One 4" by 8" sheets of 1" thick Polystyrene.
One standard wooden pencil with 1.5" by 1.5" flag attached.
Four 3.5" by 2.5" pieces of rigid cardboard each consisting of 2 playing cards glued together.
Two rubber bands each approximately 8" in circumference.

No other materials except for staples may be part of the boat.

Rules for construction of the boat:

1. The boat must be constructed from the four materials supplied by the event organizers and staples. An unlimited number of staples may be used. The polystyrene may be cut into any shape and as many pieces as desired.

2. The boat must have a width of 4" at its widest point, and a length of 8" at its longest point.

3. The pencil may be modified or cut into pieces, but the flag must not be. The flag must be positioned such that its center is 4" from the water and it flies parallel to the direction of motion of the boat. This positioning is important as the flag is used in timing the boat.

Racecourse:

The course will consist of an 8 foot long by 3 feet wide by five inch deep trough filled with water. The starting gate will be placed 10 inches from one end of the trough and the finish gate will be placed 10 inches from the other end.

Racing and Scoring:

4. The boat will be released from the end of the trough nearest the starting gate. The boat may not push off from the sides or back of the trough or from the person launching it. The person launching it must release the boat without providing it any force.

5. The timer will start when the flag crosses the starting line and ends when the flag crosses the finish line.

6. The boat may hit the sides of the trough or take on water without disqualification, but all parts of the boat must finish together.

7. The boat must remain in contact with the water at all times.

8. The winning boat will be the one that finishes the course in the shortest time.

Note: If you want to practice, 2 by 8 foot 1" thick sheets of pink polystyrene foam are used for insulation and are available at hardware stores and building supply stores.

This page intentionally left blank

THE TWENTIETH

UBC PHYSICS OLYMPICS

RULE BOOK

March 8, 1997

The Rules

- The Lilliputian Catapult
- Flying Balloons
- Making Waves
- Mystery Event
- Intuitive Physics
- The Edible Resistor

Second Annual Physics Olympics Open Event

Financial sponsorship is provided by the Rex Boughton Memorial Fund.

The UBC Physics Olympics is organised by the Department of Curriculum Studies (Mathematics and Science Education) and the Department of Physics.

In the Spirit of Physics

The wording of each challenge in this year's rule book has been carefully prepared to define each task as precisely as possible. It is expected that all participants will produce solutions which comply with the task as defined. Normal physical interpretations will be applied to all the terminology used in defining the tasks. Those solutions which, in the opinion of the judges, do not comply with the spirit and intent of the challenge, will be disqualified. General questions regarding the challenges may be directed to the coordinators of the Olympics. The coordinators will accept inquiries which may help them to prepare for unusually good solutions to the problem.

Please direct all inquiries regarding the rules to K. Schleich or D. Witt at 822-6286 or via email to olympics@noether.physics.ubc.ca. This rule book will also be available on the world wide web at http://noether.physics.ubc.ca/.

General Rules

Each school may enter one official team made up of a maximum of five members. If space permits, each school may enter one additional, unofficial team in all events. Gold, silver and bronze medals will be awarded to the official teams scoring the highest, second highest and third highest aggregate scores. Both official and unofficial teams are eligible for these medals. In addition, gold, silver and bronze medals will be awarded to the official teams scoring the highest, second highest and third highest aggregate scores. The official teams must be designated at registration. All teams must enter all events. The events are scheduled so that it is possible for all teams to enter all events. All ties will be broken. A trophy will be awarded to the school sponsoring the official team achieving the highest aggregate score. Points scored by unofficial teams will not be included in the school championship aggregate.

TWO of the events require a pre-built structure. These entries must be checked in at the time of registration on the morning of the competition at which time they will be stored in a safe place until the time of the event.

Our Special Thanks to the Event Designers:

Irfan Dhalla, Jenny Riecken, Bethany Jackson, David Gipson, Benny Fok, Kathy Lee, Richard Mar, Anson Li, David Du, Karen Lee, Lucy Ling, Joze Reverente, Iris Teo, Lilian Fan, Arman Rahmim, Timothy Edmunds, Adrien Desjardins, Jennifer Whitman, Warren Code, Kevin Lam, Flora Graham, Graham Bustard, Vince Beyer, Kathy Bright, Chris Habdank, Pieter Blue, Sherri Yurkowski, Gordan Samoukovic, Catherine Murray, Don Witt

and to

Dr. Brian Turrell, Head UBC Department of Physics

and all students of the Physics and Physics Engineering program who assist in the organization and running of this Physics Olympics.

Back to Olympics

The Lilliputian Catapult

This is a pre-built event which requires the design of an apparatus that utilises the energy stored in one rubber band to launch a package at a target whose centre is precisely 2 meters away**.**

Apparatus: The part of the apparatus that will be measured for distance is called the package. The part of the apparatus that launches the package is called the catapult. The apparatus may consist entirely of the package itself. The package must be designated by the contestants before the beginning of the event.

1. The total energy for launching the package can **only** come from the elastic potential energy stored in one Apsco brand Size 31 radial rubber band 60mm x 3.0mm x 1.1mm. The rubber band will be supplied by the event organisers. It can be utilised in any way and does not have to remain in original condition. It does not need to be returned to event organisers.

2. The apparatus must be constructed by the contestants themselves and should not consist mainly or exclusively of any sort of pre-purchased model kit or device.

3. The apparatus must have an initial height less than 20 cm above the floor. The catapult must have a maximum height of 20 cm above the floor at all stages of the launching procedure. The catapult must have a maximum width and length less than 50 cm.

The Theatre:

4. The theatre is illustrated in Figure 1 below. It consists of a 4 meter by 1 meter area of hard linoleum floor. The starting line is 1 meter from one end of the theatre. Behind the starting line is a 1 meter by 1 meter staging area for set-up and launching of the apparatus. In front of the starting line is a 3 meter by 1 meter siege area. A 30 cm high by 1 meter wide by 2.5 cm thick polystyrene wall parallel to the starting line is at a distance of 1 meter. The centre of a circular target is two meters from the starting line. Three meters from the starting line is the ending line.

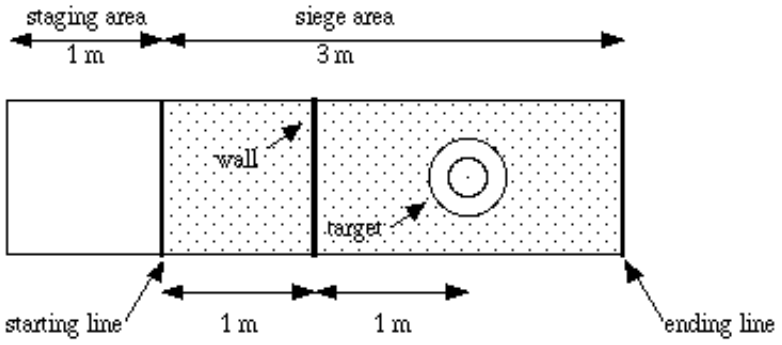

Figure 1. Diagram of the theatre.

5. The circular target is illustrated in Figure 2 below. Its overall diameter is 1/2 meter. It is made of construction paper and is secured to the floor by tape. Its top is marked with a set of concentric circles of diameter 5, 10, 15, 20, 25, 30, 35, 40, and 50 cm. Scoring will be based on which of the concentric circles the package lies entirely within after it comes to rest.

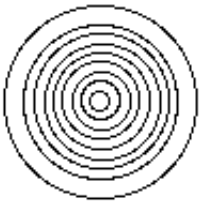

Figure 2 Diagram of the circular target.

Rules:

7. Teams will have a maximum of 8 minutes to set up their apparatus and complete four trial launches. Adjustments can be made on the apparatus between trial launches. Teams may either use the same package or identical packages for each trial launch. Teams must notify the judges in advance if they intend to use identical packages. Judges will determine at that time whether or not packages are sufficiently identical. Criteria are that the identical packages must be made of the same materials and have the same weight, shape and overall appearance.

8. The ceiling of the event area is at a height of approximately 4.2 meters from the floor. Packages that hit the ceiling at any point during their launch or damage the hard linoleum floor will be disqualified.

9. No part of either the catapult or the package can be outside of the staging area or in front of the starting line before the launch of the package. No part of the catapult may be in front of the starting line during or after the launch. No external intervention is allowed after the release of the package. **Specifically, no external intervention is allowed to stop the package.**

10. No external human intervention is allowed to align, aim or secure the catapult or package at any time during a launch. For example, a student cannot hold the catapult upright during the launch. Note that this rule does not exclude human intervention to release the catapult. For example, a student may use a finger to release a hook that fires the catapult. Also note that the catapult may be secured by nondestructive means such as tape to the floor in the staging area so long as any residue is carefully removed by the end of the 8 minute period.

11. The package must remain in or above the theatre, that is the 4 meter by 1 meter area, at all times for a trial launch to be successful. Packages that do not will be given a penalty score of 1000 cm for the trial launch.

12. The score for a successful trial launch will be determined by the distance from the centre of the target at which the package comes to rest. This distance is determined by which concentric circle on the target the package lies entirely within. Packages that break into pieces will be given a score based on the distance of the furthest piece from the centre of the target. Packages that miss the target but land between the wall and the ending line will be given a score based on the distance (measured in 5 cm increments) from the centre of the target they lie entirely within. Packages that land anywhere else in the theatre will be given a penalty score of 1000 cm.

13. The best three out of the four trial launches will be summed to find the final score for this event. The lowest score, corresponding to the most accurate targeting, will win. Ties will be broken by the weight of the package used; the team using a heavier package will place over the team using a lighter one.

Flying Balloons

Teams will be required to determine properties of a specified gas or gases using Archimedes principle and Boyle's law (the ideal gas law).

Rules:

1. Teams will be allowed to bring and use non-programmable calculators, pens or pencils and paper for the sole purpose of computing and recording results.

2. Teams will be provided with the following materials:
a meter stick
string
several paper clips
assorted washers
a balance
safety goggles
containers for gases such as balloons or paper bags
a magical sheet of information
several mystery items

3. Using the above items it *is* possible to determine a property or properties of the specified gas or gases. Don't panic; the magical sheet of information will be very helpful.

4. The team's score will be based on the method used and the accuracy of the properties determined for the specified gas or gases. In case you finish quickly, there may also be a short series of bonus questions which may increase your score.

Making Waves

This event involves an experiment that studies the reflection and interference of sound waves.

Rules:

1. Teams should bring a non-programmable calculator, pencil or pen, protractor, and a ruler.
Teams are not allowed to bring or use any materials or equipment other than the above with the exception of the apparatus for the event.

2. The apparatus will consist of one or more sources that generate sound waves of constant frequency, one or more flat surfaces that reflect sound waves, and a pressure sensitive detector that measures the intensity of sound at a given location. Some of these elements will be at fixed locations and some will be movable. Which elements are fixed and which are movable will be specified at the time of the event.

3. Teams will have a maximum of 20 minutes to measure a property of this system by devising an experiment that will do so using the given apparatus. Such an experiment may consist of a series of repositionings of the movable elements in the apparatus.

4. Teams will be judged on the accuracy of the value of their measurement. Time spent in solving the course will be used to resolve any ties with shorter times resulting in a better placement.

Mystery Event

This event will involve solving a simple experimentally oriented problem or problems using logic and knowledge of basic principles of physics.

Intuitive Physics

Each team will be presented with several simple demonstrations, simulations or experiments based on basic principles of mechanics, electricity and magnetism. Teams will be required to provide answers to questions based on these demonstrations, simulations or experiments. Answers to questions may involve simple calculations. The team with the most correct answers will win. Quality of answers involving explanations will be used to resolve ties.

The Edible Resistor

The object of this event is to build two resistors on site of edible materials that most closely match two different resistances specified by the judges on event day. These resistances will lie in the range of 1000 - 100,000 Ohms.

Apparatus. The entire apparatus will be called the resistor. The basic components of a resistor are edible or chewable materials providing the resistance, a container if desired, and two wire leads.

1. Contestants must bring all materials needed for construction of two resistors of resistance in the range of 1000 - 100,000 Ohms on event day. Contestants must also bring any tools needed for the construction of these resistors such as rulers, measuring cups and spoons, micrometers and wire cutters. Contestants may also bring notes to aid in their construction of these resistors.

2. Contestants must **not** bring a multimeter or any other device to measure resistance. **Teams found to possess such a device on the day of the event will be disqualified.**

3. The resistor must be constructed entirely by the contestants themselves. Excluding leads, it must fit into a box of 5 cm by 5 cm by 10 cm. Oversized resistors will be disqualified.

4. All resistive materials in the resistor must be safe to eat or chew. Examples of materials are kiwi skins, orange sections, salt, paper, and vinegar. Teams should be prepared to demonstrate the nature of their materials by consuming or chewing samples of them in the presence of the judges if requested.

5. The container if desired must consist of non-toxic materials of infinite resistance. Examples of such materials are glass and plastic containers.

6. Contestants must securely attach two wire leads each of approximate length 20 cm to each resistor. These leads should be constructed such that small alligator clips can be easily and securely attached to them for measurements.

Rules:

7. At the start of the event, two randomly selected resistances in the range of 1000 - 100,000 ohms will be chosen and told to the teams. Contestants will then have 10 minutes to build two different resistors that have these specified resistances out of the supplies brought by them to the event. Contestants must label each resistor with the appropriate target resistance.

8. After the end of the 10 minute period, each resistor will be measured to ensure that, excluding leads, it fits in a 5 cm by 5 cm by 10 cm box. Resistors that do not do so will be disqualified. The resistance of resistors meeting this size requirement will be accurately measured by the judges.

9. The score for each resistor will be given by

$$1000(Rm-Rs)/Rs$$

where Rm is the resistance measured by the judges and Rs is the resistance specified by the judges at the start of the event for this resistor as indicated by the contestants. The total score for the event will be the sum of the scores for each resistor. Disqualified resistors will be assessed a penalty score of 100,000 in the computation of the total score. The team with the lowest score will win. Any ties will be broken by the judge's assessment of creativity of design.

Example: The following is an example of a resistor. Take a 2 cm long piece of kiwi skin that has a little kiwi on it. Measure its resistance with a multimeter. Now sprinkle salt on it and observe that the resistance changes. Try out some other materials and see what different resistances you get. To get the best score in this event, you will want to devise a repeatable recipe for a resistance that you can implement on event day without a multimeter!

The Second Annual Physics Olympics Open Event

This year, we are again pleased to announce a completely optional event designed for the participation of those people who accompany the official teams to the Physics Olympics. This event **is not** an official Physics Olympics event and is intended for teacher teams, informal B teams (those not participating in the regular Physics Olympics events) and any other informal teams who wish to try it. No trophies will be awarded in this event, but the names of the top finishers will be announced at the awards ceremony. This event will be run at announced periods all day; anyone who wishes to participate can do so by showing up at one of these times. This year, we will revisit the 1995 event,

Paper Bridge

The object of this event is to build a paper bridge on site of the smallest amount of material that supports the largest possible weight.

Materials:

The contestants will be required to bring the following two supplies:

1. Standard paper staplers with standard staples
   (Staples with 1/2" crown, 1/4" leg, chisel point.)
2. Scissors.

The event organisers will provide each team with exactly five 8.5 x 11 in. sheets of paper. Please note that you will only be allowed to use the paper that is given to you by the event organisers.

Rules for Construction of Bridge:

1) The bridge must be constructed from no more than five 8.5 by 11 in. sheets of paper and staples only. This paper will be 20 lb. long grain white copy paper of type typically used in copiers and will be provided by event organisers. An unlimited number of staples are allowed, but every staple used in the bridge must pierce some piece of paper provided by event organisers. The paper may be cut into any shape and as many pieces as desired. Contestants may bring a "blueprint" of their bridge design to aid in the construction, but no piece of the blueprint may be incorporated into the bridge itself.

2) The bridge must have a minimum clear span of 36 cm and an overall length of no more than 80 cm. It must be constructed in such a way that it can be supported at both ends on a flat horizontal surface. It must have a roadway, i.e. a 3 cm wide flat surface with a slope of no more than 10 degrees anywhere along it that touches both flat horizontal surfaces. (See Figure 1.)

3) Bridge must be strong enough to support the chosen weights for 1 minute.

Rules for Event:

4) A selection of standard Cenco weights of masses up to 1 kilogram will be provided by event organizers. Contestants will be able to select from these weights which and how many they wish to set on the deck of their bridge.

5) Contestants will be provided with two horizontal surfaces set a distance of 36 cm apart. Each surface will be covered with one 228 mm by 279 mm sheet of 80 grit garnet paper backed sandpaper secured with masking tape. The sandpaper will extend to the edge of the surface. The bridge must sit freely on these surfaces; it cannot be secured to these surfaces by staples or any other means. Moreover, the horizontal surfaces must provide the sole source of support for the bridge; for example, the bridge cannot be supported by the floor, ceiling or vertical edges of the surfaces.

6) Contestants will have 5 minutes to set up their bridge to traverse this required minimum span and demonstrate that it will hold the selected weights for one minute.

7) Contestants will notify event organisers when they are ready to begin. Event organisers will then indicate that they are ready to judge the event. Weights will then be placed on the bridge by the contestants. They must be on top of the roadway with no part hanging below the roadway and must be supported only by the paper bridge; that is they must not be supported in whole or in part by the horizontal surfaces or any other support.

8) Bridges that collapse in under one minute result in disqualification. The score for bridges that support the chosen weights for at least one minute is given by the following formula: $W/(P+2)$

where W is the total of the chosen weights and P is the number of sheets of paper used in whole or in part by the contestants. The bridge that maximises this score wins. In the event of a tie, the bridge with the fewest staples will place highest.

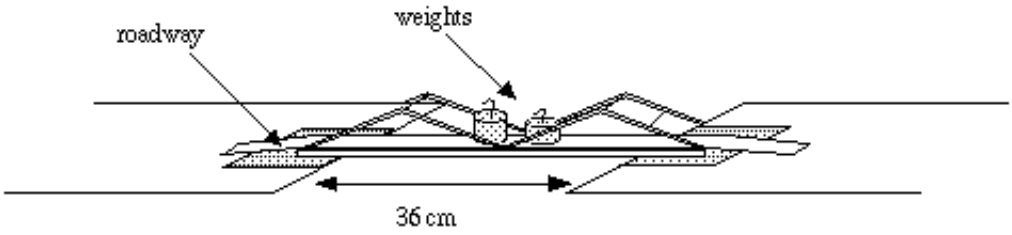

Figure 1: Example of a Bridge

Back to cover page

This page intentionally left blank

THE NINETEENTH

UBC PHYSICS OLYMPICS

RULE BOOK

March 9, 1996

The Rules

- Electric Produce
- Intuitive Physics
- Archimedes Principle
- Mystery Event
- Optical Obstacle Course
- The Rubber Band Powered Cable Car

First Annual Physics Olympics Open Event

Financial sponsorship is provided by the Rex Boughton Memorial Fund.

The UBC Physics Olympics is organised by the Department of Curriculum Studies (Mathematics and Science Education) and the Department of Physics.

In the Spirit of Physics

The wording of each challenge in this year's rule book has been carefully prepared to define each task as precisely as possible. It is expected that all participants will produce solutions which comply with the task as defined. Normal physical interpretations will be applied to all the terminology used in defining the tasks. Those solutions which, in the opinion of the judges, do not comply with the spirit and intent of the challenge, will be disqualified. General questions regarding the challenges may be directed to the coordinators of the Olympics. The coordinators will accept inquiries which may help them to prepare for unusually good solutions to the problem.

Please direct all inquiries regarding the rules to K. Schleich or D. Witt at 822-6286 or via email to olympics@noether.physics.ubc.ca. This rulebook will also be available on the world wide web; email olympics@noether.physics.ubc.ca for more information.

General Rules

Each school may enter one official team made up of a maximum of five members. If space permits, each school may enter one additional, unofficial team in all events. Gold, silver and bronze medals will be awarded to the official teams scoring the highest, second highest and third highest aggregate scores. Both official and unofficial teams are eligible for these medals. In addition, gold, silver and bronze medals will be awarded to the official teams scoring the highest, second highest and third highest aggregate scores. The official teams must be designated at registration. All teams must enter all events. The events are scheduled so that it is possible for all teams to enter all events. All ties will be broken. A trophy will be awarded to the school sponsoring the official team achieving the highest aggregate score. Points scored by unofficial teams will not be included in the school championship aggregate.

TWO of the events require a pre-built structure. These entries must be checked in at the time of registration on the morning of the competition at which time they will be stored in a safe place until the time of the event.

Our Special Thanks to the Event Designers:

Irfan Dhalla, Paul Harrison, Steve Brown, Irene Vavasour
Jenny Riecken, Elizabeth Nethery, Bethany Jackson, Paul Paddon,
Hurbert Pun, Don Witt, Ron Horwood

and to

Dr. Brian Turrell, Head UBC Department of Physics

and all students of the Physics and Physics Engineering program who assist in the organization and running of this Physics Olympics.

Back to Olympics

Electric Produce

This pre-built event involves the design of a battery that utilises chemicals found in produce and other edible items found in your kitchen at home. **The object is to build a battery which does the most work.** A simple example of a battery is given below.This battery will give you a score but to attain the best score you will need to try different designs.

Apparatus: The entire apparatus will be called the battery. The battery consists of a container which holds the basic components. The basic components are the electrodes, the electrolytes and the terminals. Each team must bring the entire battery.

1. The battery must be constructed entirely by the contestants themselves. The battery must fit into a box of 30cm by 30 cm by 30 cm. Oversized batteries will be disqualified.

2. The electrolyte must be made **only** from food items. More precisely, any electrolytes used in the battery must be safe to eat. Teams should be prepared to demonstrate the nature of their electrolytes by consuming samples of them from their battery in the presence of the judges if requested. The electrolytes may only be prepared for use by mechanical food preparation techniques: slicing, dicing, juicing, grinding, stirring, etc.

3. The electrodes can be made from materials containing only aluminium, copper, nickel, iron, tin, steel, zinc or carbon.

4. Other substances may be used in constructing the battery provided they are not electrolytes or electrodes and are non-toxic in the presence of the electrolytes. Examples of such substances are plastic food containers, coffee filter papers, cardboard, natural colored cloth, Styrofoam and resistors.

5. A cell refers to a single container with one electrolyte and two electrodes. A battery may consist of multiple cells attached via terminals. The terminals can be made out of wire or any other conductor.

6. A battery consisting of multiple cells should be contained in single container with two terminals, identified to the organisers as the positive and negative terminal. These terminals should be constructed such that small alligator clips can be easily and securely attached to them for measurements.

7. Teams must supply a written description of their battery clearly indicating all electrolytes used, all electrodes used, and all other substances used in its construction. Teams must also specify the initial voltage and current of their battery.

Rules:

8. At the start of the event, teams will be given 5 minutes to set up their battery. During this time, it is permissible to perform final assembly tasks on the battery, such as adding electrolytes to the cell or cells if desired.

9. After set up, the internal resistance r will be measured by the judges. After this initial measurement, the voltage V across a load will be measured at equal time intervals for 10 minutes. This load will consist of a resistance equal to the initial measured internal resistance r of your battery. The length of the time interval will be set by the judges on event day and be the same for all teams. Once the testing begins, no team can touch their battery.

10. After testing, the size of the battery will be measured. This measurement will be based on volume. This volume will be that of the smallest cubic box that the battery will fit in completely. There will be three box sizes provided for this test: 10 cm by 10 cm by 10 cm, 20 cm by 20 cm by 20 cm, and 30 cm by 30 cm by 30 cm.

11. Upon request, teams will be required to disassemble their battery after testing to verify its compliance with the rules.

12. The score will be given by the work done by the battery on the load over the ten minute period divided by the volume of the smallest box that it fits in. The work will be computed from the power at the specified time intervals,

$$P = V^2 / r$$

where r is the resistance of the load in ohms and V is the voltage in volts across the load as measured by the judges at the specified time intervals. Oversized batteries will be disqualified.The winning battery will be that with the largest score.

Example: The following is an example of a single cell battery. Place juice from half of a lemon in a small glass dish, add table salt and stir. Next, place a penny in one side of the dish so that it is partially exposed to the air, and aluminium foil in the other side of the dish again partly exposing it to the air but not touching the penny. Next, measure the voltage and current using a multimeter by touching exposed parts of the penny and foil. In this example the electrolyte is the salted lemon juice and the penny and foil are the electrodes. This battery is not the best possible battery as it has relatively high internal resistance.However, it will get a score. Note that to get the best score, you want to make the internal resistance of your battery low.

Intuitive Physics

Each team will be presented with three to four simple demonstrations or experiments based on basic principles of mechanics, electricity and magnetism. Teams will be required to provide answers to questions based on these demonstrations or experiments. Answers to questions may involve simple calculations. The team with the most correct answers will win. Quality of answers involving explanations will be used to resolve ties.

An example of a simple demonstration is the following:

Teams are provided with plastic rods, one of which is suspended on a string, fur, silk and other items. Teams are invited to see what happens when the rods are rubbed with the various items and placed near each other. Teams are then asked which items have like charge and which have opposite charge when rubbed against plastic rods. Teams are also asked to explain how they arrived at their conclusions.

Archimedes Principle

Teams will be required to determine the densities of various unknown fluids using Archimedes principle.

Rules:

1. Teams will be allowed to bring and use non-programmable calculators, pens or pencils and paper for the sole purpose of computing and recording results.

2. The materials provided by the event organisers will come in different sets. A list of contents of each materials set will be provided to each team at the beginning of the event. Each set will cost a specified number of points, with sets that are easiest to use and produce the most accurate results costing more points then sets that require more ingenuity and/or produce less accurate results. Teams must then decide which set to use to perform the required density measurements and request this set from the event organisers.

3. Teams are allowed a total time of 30 minutes to complete this event. At the end of this event, teams must clean up their work area and return all components of their materials set to the event organisers or else be disqualified.

4. The team's score will be based on the accuracy of the densities determined for the various unknown fluids multiplied by the cost of the set used in making the measurements. At the time of the event there will be a short series of bonus questions that will be used to resolve ties.

Mystery Event

This event will involve solving a simple experimentally oriented problem or problems using logic and knowledge of basic principles of physics.

Optical Obstacle Course

The goal of this event is to direct a laser beam or beams through an optical obstacle course to a hit a target as accurately as possible. The optical obstacle course will contain optical objects such as prisms, plane mirrors and other transparent objects with specified indexes of refraction. Some course elements will be fixed and some will be movable.

To prepare for this event, contestants should be able to use Snell's law and the law of reflection. Contestants should bring a non-programmable calculator, pencil, protractor, and a ruler.

Rules:

1. Students may not move any of the fixed course components. One fixed course component will be the laser. Other components that are fixed will be specified at the time of the event.

2. The beam or beams may be required to pass through certain fixed course components for a successful completion of the obstacle obstacle course. These components will be specified at the time of the event.

3. A maximum of fifteen minutes will be allowed for each team to set up the movable objects in the course. No movable course objects may be placed outside of the designated course boundaries. Only the equipment provided may be used.

4. No trial runs are permitted. The laser will turned on by one of the event coordinators after the students' set-up is complete. (Alternately, at the end of the allotted time if this comes before the contestants have fully completed their set-up). After the laser has been turned on by the coordinator, no course objects may be moved.

5. Score will be based on accuracy at hitting the target with severe penalties if beam path misses the required fixed course components. Time spent in solving the course will be used to resolve any ties with shorter time being better.

The Rubber Band Powered Cable Car

This is a pre-built event which involves the design of a car that utilises the energy stored in two rubber bands to move a distance of **precisely 3 meters up an inclined cable and then to return to the starting line in the fastest time.**

Apparatus: The part of the apparatus that will be measured for distance is called the car. The entire apparatus can be the car itself. The car must be designated by the contestants before the beginning of the trek up the cable to the mountain.

1. The total energy for moving the car can **only** come from the elastic potential energy stored in at most two Apsco brand Size 31 radial rubber bands 60mm x 3.0mm x 1.1mm. The two rubber bands will be supplied by the event organisers. They can be utilised in any way and do not have to remain in original condition. They do not need to be returned to event organisers.

2. The apparatus must be constructed by the contestants themselves and should not consist mainly or exclusively of any sort of pre-purchased model kit or device. The car's mass must be less than or equal to 2 kg.

3. The car must be designed to carry a passenger consisting of one adult *Playmobil* figurine. (See figure 1.) The figurine will be provided by event organisers on race day and must be returned undamaged at end of test runs. Thus, for example, it can be belted into the car but cannot be glued or stapled to the car on race day. The adult figurine weighs approximately 13 gm and is approximately 7.5 cm tall by 3.5 cm wide by 2 cm deep while standing and 5 cm tall by 4 cm deep while sitting. Note that both the arms and legs of the figurines are positionable.

Figure 1: Playmobil adult and child figurines.

4. The car must be able to trigger timing gates positioned at the starting line and near the summit point; that is it must contain some opaque part that is at least 5 cm in width at any height between 8 and 13 cm below the position of the cable **before** the car is attached. Note that you should compensate for any sagging in the cable caused by your car in positioning this part. This opaque part must also be parallel to the length of the car.

Racecourse:

5.The car is required to move on a 40lb test monofilament fishing line called the cable. One end of the cable is attached to the face of the mountain. A 4 kg mass attached to the other end hangs a vertically suspended from a support tower of height 0.7 meters as shown. The cable will be at 15 degree angle relative to a plane parallel

to the floor before the car is attached. The total linear length of the cable is 6 meters between the face of the mountain and the support tower.

6. The starting line and summit point are 3 meters apart as measured along the cable with no car attached.There will be a cardboard barrier placed around the cable at a point approximately 1 meter behind the starting line. There will also be a cardboard barrier placed around the cable approximately at the face of the mountain.The start box is the volume between this barrier and the starting line, below the cable and .5 meter to each side of the cable.

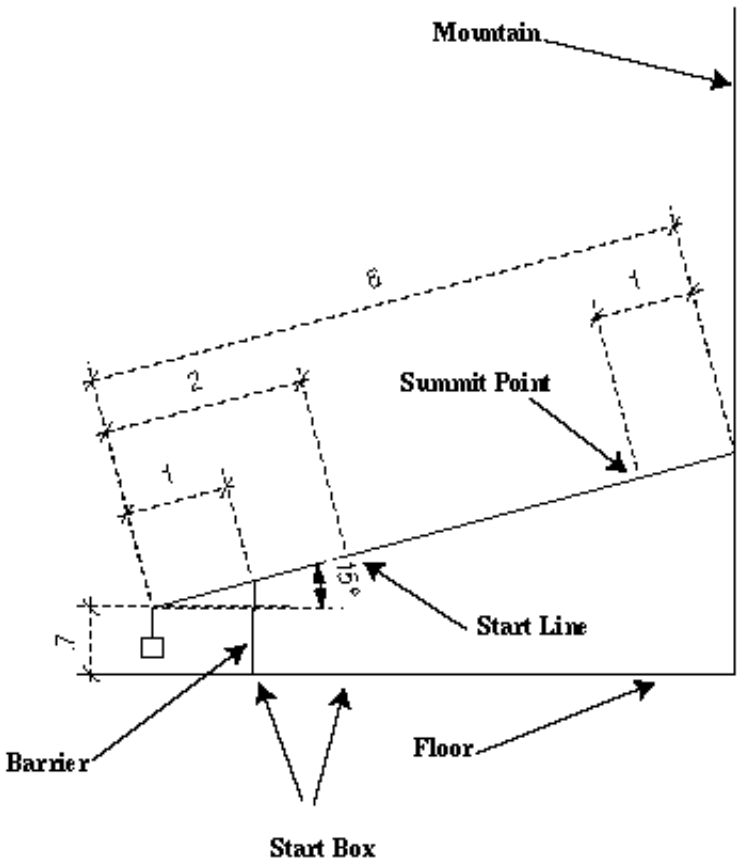

Figure2: Side view of racecourse

Rules:

7. Teams will have a maximum of 8 minutes to set up their apparatus and complete two trial runs. Teams can make adjustments on their apparatus between trial runs.

8. The car must be attached to the cable by some means such as a hook or eyelet that does not require dismantling the racecourse. The car is the only piece of the apparatus that may touch the cable at any time during setup and the two trial runs. The car must remain attached to the cable at all times during its trial run.

9. No part of either the apparatus or the car can be outside of the start box or in front of the starting line before the release of the car. Only the car can be in front of the starting line during the trial run. The car must be released from rest. No external intervention is allowed after the release of the car. **Specifically, no external intervention is allowed to stop the car or restart the car for its return trip to the starting line.**

10. The car must transport the Playmobil figurine to the summit and back across the starting line.

11. If the cable breaks during the run, your team will be disqualified if the judge deems the break to be caused by your car.

12. The maximum score will be attained by a car that travels a distance of precisely 3 meters and returns from this point back to the starting line in the fastest time. **The distance will be the shortest distance from the rear most point of the car to the starting line measured along the cable.** Note that, for example, if a string attaches the car to the apparatus in the start box, the distance travelled is zero.

13. The score for a trial run is given by the formula $T|d-3| + T$ for $2.8 <= d <= 3.2$ where T is your time of the return trip from the summit point to the starting line and d is the distance in meters. The score is given by the formula $10|d-3| + 10$ for $d < 2.8$ and $20|d-3| + 10$ for $3.2 < d < 4$. If any part of your car hits the cardboard barrier in front of the face of the mountain or any other object before crossing the starting line on the return trip, the score is given by the formula is $50|d-3| + 10$.

14. The lowest score attained in the two trial runs will be used as the team score. In the event of a tie, the lowest sum of both scores will be used to resolve the tie.

The First Annual Physics Olympics Open Event

This year, we are pleased to announce a completely optional event designed for the participation of those people who accompany the official teams to the Physics Olympics. This event **is not** an official Physics Olympics event and is intended for any teacher teams, informal B teams (those not participating in the regular Physics Olympics events) and any other informal teams who wish to try it. No trophies will be awarded in this event, but the names of the top finishers will be announced at the awards ceremony. This event will be run at announced periods all day; anyone who wishes to participate can do so by showing up at one of these times. This year, we will revisit the 1992 classic event,

Paper Boat Race

The object of this event is to build a paper sailboat that will sail the racecourse described below in the fastest possible time carrying an apple.

Materials: The contestants will be required to bring the following two supplies:

1. A stapler with staples.
2. Scissors.

The event organisers will provide each team with exactly three 8.5 x 11in. sheets of paper. Also, everyone will be provided with access to a small testing tank with water to balance their boat before the race.

Rules for construction of boat:

1. The boat must be constructed from no more than three 8.5 by 11 sheets of paper and staples. This paper will be 20 lb. long grain white copy paper of type typically used in copiers and will be provided by event organisers. An unlimited number of staples are allowed. The paper may be cut into any shape and as many pieces as desired. Contestants may bring a "blueprint" of their boat design to aid in the construction, but no piece of the blueprint may be incorporated into the boat itself.

2. The boat must not be longer than 9 inches and must have a sail that reaches a minimum height of 4 inches above the water line. The profile of the sail must be at least 1 inch wide at the height of 4 inches to ensure triggering of the timer.

3. The boat must be designed so that it will carry one medium size apple. This apple will be supplied by the event organisers and must be returned in good condition at the end of the race.

Racecourse: The course will consist of an 8 foot long by 3 foot wide by 5 inch deep trough filled with water. The starting gate will be placed 9 inches from one end of the trough and the finish gate will be placed 9 inches from the other end of the trough. There will be a source of wind power provided; it will be produced by a standard 22 inch by 22 inch box fan on low setting. The fan will be placed 3 to 4 feet away from the starting end of the trough.

Rules: For racing and scoring:

4. The back end of the boat will be placed against the end of the trough nearest to the starting gate and released by a member of the school team.

5. The timer will start when the sail crosses the starting gate and stop when the sail crosses the finish gate.

6. The boats are allowed to hit the sides of the trough and will not be disqualified if they take on water, assuming that they finish.

7. The winning boat will be the one with the fastest time. Should there be a tie for best score, another set of time trials will be run to break the tie. The judge's decisions will be final.

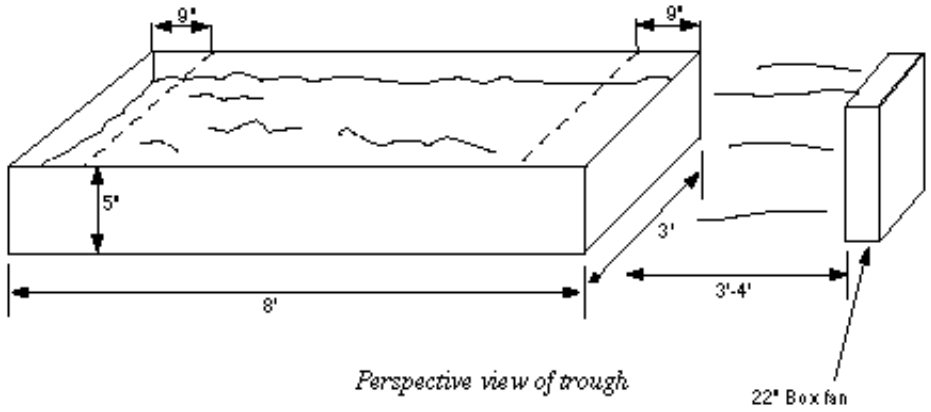

Perspective view of trough

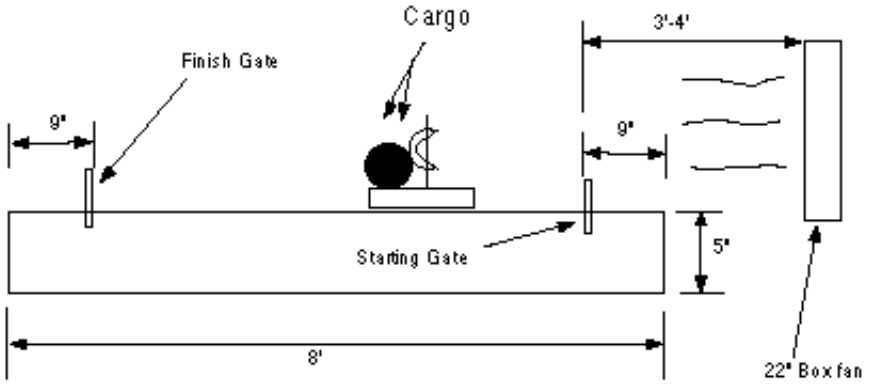

Side view of trough

THE EIGHTEENTH

UBC PHYSICS OLYMPICS

RULE BOOK

March 11, 1995

The Rules

- River Ferry Race
- Paper Bridge
- Mystery Event
- Jeopardy!
- Optical Obstacle Course
- Intuitive Physics

Financial sponsorship is provided by the Rex Boughton Memorial Fund.

The UBC Physics Olympics is organised by the Department of Curriculum Studies (Mathematics and Science Education) and the Department of Physics.

In the Spirit of Physics

The wording of each challenge in this year's rule book has been carefully prepared to define each task as precisely as possible. It is expected that all participants will produce solutions which comply with the task as

defined. Normal physical interpretations will be applied to all the terminology used in defining the tasks. Those solutions which, in the opinion of the judges, do not comply with the spirit and intent of the challenge, will be disqualified. General questions regarding the challenges may be directed to the coordinators of the Olympics. The coordinators will accept inquiries which may help them to prepare for unusually good solutions to the problem.

Please direct all inquiries regarding the rules to K. Schleich or D. Witt at 822-6286 or via email to olympics@noether.physics.ubc.ca.

General Rules

Each school may enter one official team made up of a maximum of five members. If space permits, each school may enter one additional, unofficial team in all events. Gold, silver and bronze medals will be awarded to the official teams scoring the highest, second highest and third highest aggregate scores. Both official and unofficial teams are eligible for these medals. In addition, gold, silver and bronze medals will be awarded to the official teams scoring the highest, second highest and third highest aggregate scores. The official teams must be designated at registration. All teams must enter all events. The events are scheduled so that it is possible for all teams to enter all events. All ties will be broken. A trophy will be awarded to the school sponsoring the official team achieving the highest aggregate score. Points scored by unofficial teams will not be included in the school championship aggregate.

TWO of the events require a pre-built structure. These entries must be checked in at the time of registration on the morning of the competition at which time they will be stored in a safe place until the time of the event.

Our Special Thanks to the Event Designers:

Vikas Bhushan Glenn Wells Irfan Dhalla Paul Harrison
Steve Brown Jenny Riecken Elizabeth Nethery Jamila Fazal Karim
Don Witt Tiago De Jesus Alex Dickenson Andrew DeBenedictis
Darwin Hawes Louie Van De Lagemaat
and to
Dr. Brian Turrell, Head UBC Department of Physics
and all students of the Physics and Physics Engineering program who assisted in this Physics Olympics.

Back to Olympics

River Ferry Race

The object of this event is to construct a ferry powered by a crosswind that covers the racecourse described below in the shortest amount of time. This ferry is to be prebuilt by the contestants.

Rules for Construction:

1) Ferries must be built by the contestants **only** of materials in the following list:

Paper, Cardboard, Aluminium Foil, Aluminium Soda Cans, Polystyrene Foam, Cloth, Pieces of wood less than 2 cm in diameter by 20 cm in length such as Match sticks, Popsicle sticks, Bamboo skewers and Balsa Wood sticks, Wire of equal or smaller gauge as that in metal coat hangers, Dental Floss, String, Staples, Paper Clips, Scotch Tape, Masking Tape, White Glue, Wood Glue, Rubber Bands, Pennies.

Materials can be cut, reshaped or carved in any manner by the contestants.

2) The energy utilised to propel the river ferry must come only from the crosswind produced by the fan bank. This energy may be stored or converted into other forms for use in moving the boat. Energy needed for any other ferry functions such as steering must also come only from the crosswind either directly or from a stored or converted form.

3) The ferry must have a length of no more than 22 cm at its longest point, a width of no more than 30 cm at its widest point and a height of no more than 40 cm at its highest point. These restrictions must be satisfied at all times during the race. The ferry must be completely self-contained; it must leave no part of itself behind while racing.

4) The ferry must be designed to carry two passengers consisting of one adult and one child *Playmobil* figurines. (See figure 1.) The figurines will be provided by event organisers on race day and must be returned undamaged at end of test runs. The passengers must be carried in a civilised manner, that is they must sit, lie or stand freely in or on the ferry. A simple test of this is that the passengers must fall out when ferry is turned upside down. Thus, for example, they cannot be tied, taped, glued or stapled to the ferry on race day. The adult figurine weighs approximately 13 gm and is approximately 7.5 cm tall by 3.5 cm wide by 2 cm deep while standing and 5 cm tall by 4 cm deep while sitting. The child figurine weighs approximately 7 gm and is approximately 5 cm tall by 3 cm wide by 2 cm deep while standing and 3.5 cm tall by 2.5 cm deep while sitting. Note that both the arms and legs of the figurines are positionable.

Figure 1: Playmobil adult and child figurines.

5) The ferry must be able to trigger the timing gates; that is it must contain some opaque part that is at least 5 cm in width at any height between 8 and 13 cm above the water. This opaque part must also be parallel to the length of the ferry. For example, this requirement can be satisfied by a 5 cm by 5 cm flag with its centre positioned 10.5 cm from the water flying parallel to the length of the ferry. It can also be satisfied by some

other part of the ferry such as its sail.

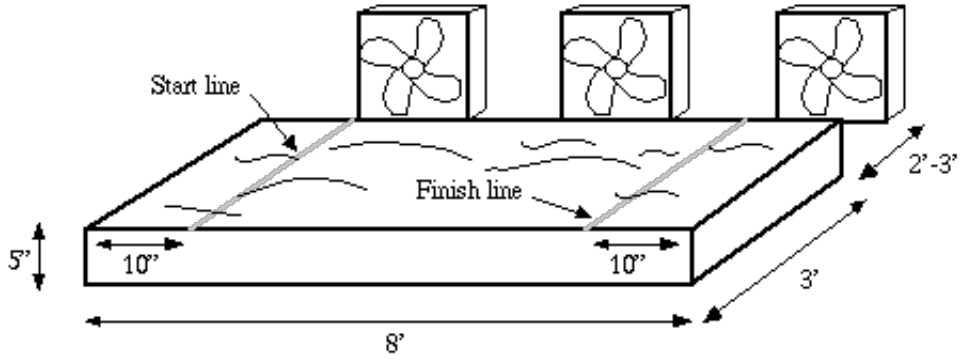

Figure 2: Trough for River Ferry Race:

Racecourse:
The course will consist of an 8 foot long by 3 foot wide by five inch deep trough filled with approximately four inches of water. The start line will be placed 10 inches from one end of the trough and the finish line will be placed 10 inches from the other end. Wind will be supplied by a fan bank consisting of three equally spaced standard 22 inch by 22 inch box fans on low setting. These fans will be placed parallel to the length of the course at a distance of between 2 and 3 feet from the trough. (See figure 2.) Contestants cannot move the fans.

Racing and Scoring:

6) Teams will have total of 5 minutes to set up and make a maximum of 3 ferry runs.

7) For each run, the ferry will be released by the team from the end of the trough nearest the starting gate. The ferry must be released without providing it any force. Ferry must not contain any stored energy at time of release. After release, *there must be no external intervention of any sort until run is completed.*

8) The timer will start when the flag or other opaque part of the ferry at the height specified in 5) crosses the starting line and will stop when it crosses the finish line. The ferry must remain in contact with the water at all times. The ferry may make contact with the sides of the trough or take on water without disqualification, but all parts of the ferry must finish together. In particular, any run on which a passenger falls overboard will be disqualified.

9) Teams can stop a run at any time by request to the event organisers. Note that a stopped run counts toward the maximum of 3, but is disqualified. Teams may perform adjustments on their ferry between runs.

10) The winning ferry will be the one that has the fastest single run. In the event of a tie, the total time of the fastest two runs will be used to resolve it. Any further ties will be broken by the judge's decision on most innovative design.

Advice: Note that the ferry will be sailing in a crosswind! Additionally observe that there may be irregularities in the crosswind due to the edges of the fans, though event organisers will make the wind as uniform as possible. As race conditions may vary from those at your high school, teams should plan to be able to make small adjustments to their ferries on race day. In particular, wind conditions may be slightly different and the water level in the trough may be slightly higher or lower. Finally, 2 foot by 8 foot 1" thick sheets of pink polystyrene foam are used for insulation and are available at hardware stores and building supply stores.

Paper Bridge

The object of this event is to build a paper bridge on site of the smallest amount of materials that supports the largest possible weight. Teams will supply their own prebuilt test weight.

Materials:

The contestants will be required to bring the following three supplies:

1. Standard paper staplers with standard staples
(Staples with 1/2" crown, 1/4" leg, chisel point.)

2. Scissors.

3. One test weight, henceforth referred to as a "truck".
The event organisers will provide each team with exactly fifteen 8.5 x 11 in. sheets of paper. Please note that you will only be allowed to use the paper that is given to you by the event organisers. Since you will receive only fifteen sheets of paper it is highly recommended that you practice before coming to the Olympics and bring a "blueprint".

Rules for Construction of Bridge:

1) The bridge must be constructed during a 10 minute period at the beginning of the event. It must be constructed from no more than fifteen 8.5 by 11 in. sheets of paper and staples only. This paper will be 20 lb. long grain white copy paper of type typically used in copiers and will be provided by event organisers. An unlimited number of staples are allowed, but every staple used in the bridge must pierce some piece of paper provided by event organisers. The paper may be cut into any shape and as many pieces as desired. Contestants may bring a "blueprint" of their bridge design to aid in the construction, but no piece of the blueprint may be incorporated into the bridge itself.

2) The bridge must have a minimum clear span of 36 cm and an overall length of no more than 80 cm. It must be constructed in such a way that it can be supported at both ends on a flat horizontal surface. It must have a roadway, i.e. a deck such that a toy car of width of 3 cm. can safely roll over the bridge from one horizontal surface to another. (See figure 3.)

3) Bridge must be strong enough to support the team supplied "truck" for 1 minute.

Rules for the "Truck":

4) The "truck" must have a length of less than 15 cm and a maximum width that is within 120% of the width of the roadway. It must be one unit. It may be made of any material and may be any shape that conforms with the previously specified dimensions. It must be designed such that it can be placed centred on the span on top of the roadway. When so placed, it must not have any part hanging below the roadway.

5) The "truck" must be checked-in as a prebuilt. Its weight at check-in time must be specified by the contestants.

Rules for Event:

6) The "truck" will be weighed by event organisers at beginning of event to obtain the official weight. The "truck" must have the weight specified at check-in.

7) Contestants will be provided with two horizontal surfaces set a distance of 36 cm apart. Each surface will be covered with one 228 mm by 279 mm sheet of 80 grit garnet paper backed sandpaper secured with masking tape. The sandpaper will extend to the edge of the surface. The bridge must sit freely on these surfaces; it cannot be secured to this surface by staples or any other means.Moreover, the horizontal surfaces must provide the sole source of support for the bridge; for example, the bridge cannot be supported by the floor, ceiling or vertical edges of the surfaces.

8) Contestants will have 5 minutes to set-up their bridge to traverse this required minimum span and demonstrate that it will hold the "truck" for one minute.

9) Contestants will notify event organisers when they are ready to place their "truck". Event organisers will then indicate that they are ready to judge the event. The "truck" will then be placed on bridge by contestants. It must be centred on the span on top of the roadway with no part hanging below the roadway. It must be supported only by the paper bridge; that is it must not be supported in whole or in part by the horizontal surfaces or any other support.

10) Bridges that collapse in under one minute result in disqualification. Score for bridges that support the "truck" for at least one minute are given by the following formula: W/(P+2)

where W is the weight of the "truck" and P is the number of sheets of paper used in whole or in part by the contestants. The bridge that maximises this score wins. In the event of a tie, the bridge with the fewest staples will place highest.

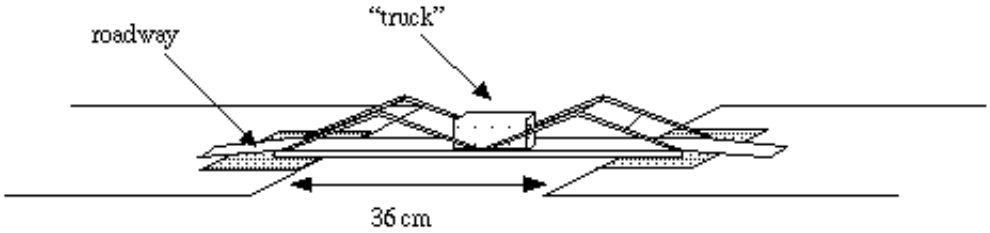

Figure 3: Example of a Bridge

Mystery Event

This event will involve solving a simple experimentally oriented problem or problems using logic and knowledge of basic principles of physics, especially Bernoulli's equation for fluid flow.

Jeopardy!

Teams will compete against each other to demonstrate general physics knowledge in a quiz show format based on the television show Jeopardy! In Jeopardy!, recall that the questions are phrased in terms of answers and contestants responses must be phrased in terms of a question. For example,

A: He won the Nobel Prize in 1918 for his discovery of energy quanta.

Q: Who was Max Planck?

Four teams will compete against each other in each game. Each game will consist of three rounds, Jeopardy, Double Jeopardy and Final Jeopardy.

The first two rounds, Jeopardy and Double Jeopardy, will each last 5 minutes. Each will consist of six categories with each with five answers. The categories will cover physics topics ranging from famous physicists to quantum physics. The five answers in each category will have point values worth 100, 200, 300, 400, 500 points in Jeopardy, and 200, 400, 600, 800, 1000 points in Double Jeopardy. The more an answer is worth, the more challenging it will be. The team selecting the first category and value will be chosen by random draw in Jeopardy and by highest score in Double Jeopardy.

Once the answer is revealed, teams will have five seconds to "buzz-in" to provide the correct question. The first team to "buzz-in" has five seconds to do so. If the correct question is not provided is the remaining eligible teams have an additional three seconds to "buzz-in". A correct question will add the answer's value to the team's score, and an incorrect one will take its value
from the team's score. The team with the last correct response chooses the next category and value.

In Final Jeopardy, a category will be given, and the teams will have fifteen seconds to record how many points they wish to wager on the final answer. This number can be between zero and their score, inclusive. Only teams with a score greater than zero are allowed to compete in Final Jeopardy. Once the final answer is revealed, the teams will have one minute to write their question. The winner of the game is the team with the most points.

Game winners will be ranked according to their final point scores. The four top scoring game winners will compete in a final game of Jeopardy! to determine first through fourth place. The remaining places will be awarded first to remaining game winners according to point scores, then to all other teams according to point scores.

Optical Obstacle Course

The goal of this event is to direct a laser beam or beams through an optical obstacle course to a hit a target as accurately as possible. The optical obstacle course will contain optical objects such as prisms, plane mirrors and other transparent objects with specified indexes of refraction. Some course elements will be fixed and some will be movable.

To prepare for this event, contestants should be able to use Snell's law and the law of reflection. Contestants should bring a non-programmable calculator, pencil, protractor, and a ruler.

Rules:

1) Students may not move any of the fixed course components. One fixed course component will be the laser. Other components that are fixed will be specified at the time of the event.

2) The beam or beams may be required to pass through certain fixed course components for a successful completion of the obstacle obstacle course. These components will be specified at the time of the event.

3) A maximum of fifteen minutes will be allowed for each team to set up the movable objects in the course. No movable course objects may be placed outside of the designated course boundaries. Only the equipment provided may be used.

4) No trial runs are permitted. The laser will turned on by one of the event coordinators after the students' set-up is complete. (Alternately, at the end of the allotted time if this comes before the contestants have fully completed their set-up). After the laser has been turned on by the coordinator, no course objects may be moved.

5) Score will be based on accuracy at hitting the target with severe penalties if beam path misses the required fixed course components. Time spent in solving the course will be used to resolve any ties with shorter time being better.

Intuitive Physics

Each team will be presented with three to four simple demonstrations or experiments based on basic principles of mechanics, electricity and magnetism. Teams will be required to provide answers to questions based on these demonstrations or experiments. Answers to questions may involve simple calculations. The team with the most correct answers will win. Quality of answers involving explanations will be used to resolve ties.

An example of a simple demonstration is the following:

Teams are provided with plastic rods, one of which is suspended on a string, fur, silk and other items. Teams are invited to see what happens when the rods are rubbed with the various items and placed near each other. Teams are then asked which items have like charge and which have opposite charge when rubbed against plastic rods. Teams are also asked to explain how they arrived at their conclusions.

Back to cover page

THE SEVENTEENTH

UBC PHYSICS OLYMPICS

RULE BOOK

MARCH 5, 1994

The Rules

- The Amazing Electrical Circuit
- Rubber Band Powered Boat Race
- The Incredible Wheeled Swamp Buggy
- Mystery Event
- Intuitive Physics Problems
- Jeopardy!
- Ballistic Egg Event

Financial sponsorship is provided by the Rex Boughton Memorial Fund.

The UBC Physics Olympics is organized by the Department of Mathematics and Science Education and the Department of Physics
.

In the Spirit of Physics

The wording of each challenge in this year's rule book has been carefully prepared to define each task as

precisely as possible. It is expected that all participants will produce solutions which comply with the task **as defined.** Normal physical interpretations will be applied to all the terminology used in defining the tasks. **Those solutions which, in the opinion of the judges, do not comply with the spirit and intent of the challenge, will be disqualified.** General questions regarding the challenges may be directed to the coordinators of the Olympics. The coordinators will accept inquiries which may help them to prepare for unusually good solutions to the problem which may require special room conditions and/or measurement equipment.

General Rules

Each school may enter one official team made up of a maximum of five members. If space permits, each school may enter one additional, unofficial team in all events. Gold, silver and bronze medals will be awarded to the official teams scoring the highest, second highest and third highest aggregate scores. Both official and unofficial teams are eligible for these medals. In addition, gold, silver and bronze medals will be awarded to the official teams scoring the highest, second highest and third highest aggregate scores. The official teams must be designated at registration. **All teams must enter all events.** The events are scheduled so that it is possible for all teams to enter all events. All ties will be broken. A trophy will be awarded to the school sponsoring the official team achieving the highest aggregate score. Points scored by unofficial teams will not be included in the school championship aggregate.

ONE of the events requires a pre-built structure. This entry must be checked in at the time of registration on the morning of the competition at which time it will be stored in a safe place until the time of the event.

Further Information

For official clarification and further information about event rules call Kristin Schleich at
(604) 822-6286 or e-mail olympics@noether.physics.ubc.ca

Our Special Thanks to the Event Designers:

May Chiao, James Nikkel, Erica Bird, Kim Callaghan, Louie van de Lagemaat, Jeff Vavasour, Alex Dickenson, Glenn Wells, Mark Allen, Irene Lees, Isaac Leung, Gary Lim, Rob McDuff, Tiago De Jesus

and to

Dr. Brian Turrell, Head UBC Department of Physics and all students of the Physics and Engineering Physics program who assisted in this Physics Olympics**.**

Back to Olympics

The Amazing Electrical Circuit

This event will require teams to race to solve an electrical maze.

Materials: The following equipment will be provided:

- digital multimeters
- paper
- ruler

Rules:

1. Contestants are not allowed to bring or use any materials or equipment other than those provided with the exception of pens or pencils for writing.

2. Teams will be given a fixed circuit consisting of a DC power supply, a small circuit containing one or more light emitting diodes and some or all of the following components: resistors, capacitors, switches and diodes. The components may not necessarily be visually identifiable to the contestants; it may be necessary to identify them using their properties and the provided equipment. Recall that a diode is a component which allows the passage of current in only one direction. It is represented in a circuit diagram by where the arrow indicates the allowed direction. A capacitor is a charge storage device

with the property that it does not allow the passage of DC current. It is represented in a circuit diagram by . A switch is a device that allows current to pass in both directions when closed, and does not allow current to pass when open. It is represented by . A resistor changes the voltage across itself according to Ohm's law and is represented by . Finally, a DC power supply is represented by where the current flows from the negative to positive plate and larger plate is positive.

3. Each team will be expected to find a path through the circuit that will provide a specified voltage and current to the small circuit. Successful completion of this task will cause the light emitting diode or diodes to perform in some specified manner, such as flashing on and off. This path will be made by opening and closing switches. Each team will also be expected to draw a circuit diagram of the entire maze. These diagrams will be turned in when the team has successfully solved the maze and will be used in the scoring.

4. Each team will be awarded a time based on the time that their circuit diagram is turned in to the event organizers. The winners of the event will be determined by the least time taken in finding a correct solution to the maze that passes through the least number of components. In the unlikely event of a tie, the clarity and completeness of the circuit diagram will be a deciding factor in determining a winner.

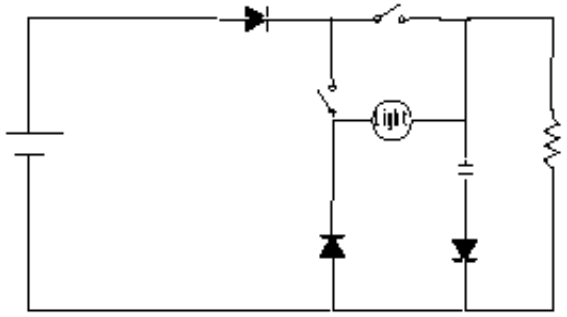

An example of a simple maze

Rubber Band Powered Boat Race

The object of this event is to construct a polystyrene boat powered by elastic bands that covers the racecourse described below in the shortest amount of time.

Materials : Contestants are required to bring:

- A pair of scissors.
- A stapler with staples.
- Manual cutting tools appropriate for work on polystyrene (no power tools)
- One 8.5" by 11" piece of paper for notes/blueprints.
- A pencil sharpener.

No other supplies may be brought.
Teams will be supplied with the following materials by the event organizers:

- Two 4" by 8" sheets of 1" thick pink Polystyrene.
- One standard wooden pencil with flag attached. Flag is 1.5" by 1.5" and is located at the top of the pencil.
- Four 3.5" by 2.5" pieces of rigid cardboard each consisting of two playing cards glued together.
- Two rubber bands each approximately 8" in circumference.

No other materials except for staples may be part of the boat.

Rules for construction of the boat:

1. The boat must be constructed during a ten minute period during the beginning of the event from the four materials supplied by the event organizers and staples. An unlimited number of staples may be used. The polystyrene may be cut into any shape and as many pieces as desired.

2. The boat must have a width of 4" at its widest point, and a length of 8" at its longest point.

3. The pencil may be modified or cut into pieces, but the flag must not be. The flag must be positioned such that its centre is 4" from the water and it flies parallel to the direction of motion of the boat. This positioning is important as the flag is used in timing the boat.

Racecourse: The course will consist of an 8 foot long by 3 feet wide by five inch deep trough filled with water. The starting gate will be placed 10 inches from one end of the trough and the finish gate will be placed 10 inches from the other end.

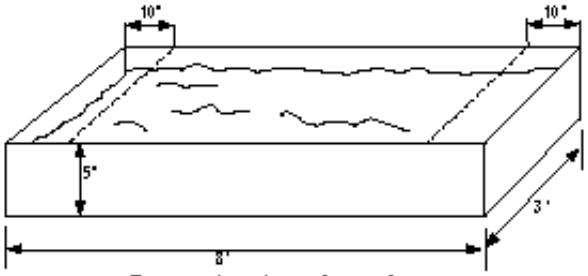

Perspective view of trough

Racing and Scoring:

1. The boat will be released by one member of the school team from the end of the trough nearest the starting gate. The boat may not push off from the sides or back of the trough or from the launching team member. The launcher must release the boat without providing it any force.

2. The timer will start when the flag crosses the starting line and ends when the flag crosses the finish line.

3. The boat may hit the sides of the trough or take on water without disqualification, but all parts of the boat must finish together.

4. The boat must remain in contact with the water at all times.

5. The winning boat will be the one that finishes the course in the shortest time. In the event of a tie, another set of time trials will be run using the same boats to break the tie. No repairs or modifications will be allowed for re-trials.

Note: 2 by 8 foot 1" thick sheets of pink polystyrene foam are used for insulation and are available at hardware stores and building supply stores such as Irly Bird Hardware in Vancouver.

Below is a simplified diagram of an acceptable boat. However, this is only one of many possible configurations, and certainly not the most efficient!

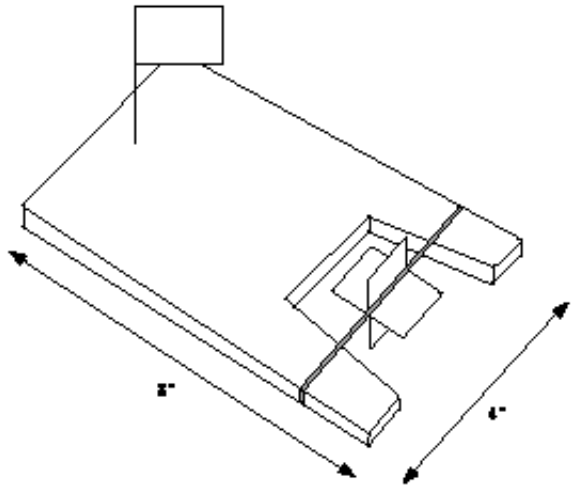

The Incredible Wheeled Swamp Buggy

A fan-powered cart will be constructed to run on a linoleum floor.

Apparatus: The part of the apparatus that will be timed is called the cart. The entire apparatus can be the cart itself, or may consist of a cart and other components. The cart must be designated by the contestants before the beginning of the trial.

1. The total energy for powering the fan can only come from the energy produced by a one kilogram mass falling a maximum vertical distance of one meter. This energy can be stored or converted into other forms by the apparatus for use in powering the fan.

2. Movement of air by the fan must provide the only source of propulsion for the cart. Specifically, the energy of the falling mass cannot be directly used to propel the cart.

3. The fan must be carried by the cart at all times.

4. The one kilogram mass will be supplied by the event organizers. It must be mounted on or utilized by the apparatus without altering it in any way and returned undamaged at the end of the event. Teams not returning the mass will be disqualified.

5. The cart must have a 5 cm. by 5 cm. square rigid flag placed parallel to the direction of travel whose bottom edge is situated at a height of 10 cm. from the floor. This flag must be directly attached to a rigid vertical flagpole or other rigid vertical piece of the cart. This flag must remain attached in this manner at all times. Note that flag placement is important as it is used to time the cart.

6. The apparatus must be constructed by the contestants themselves and should not consist mainly or exclusively of any sort of pre-purchased model kit or device.

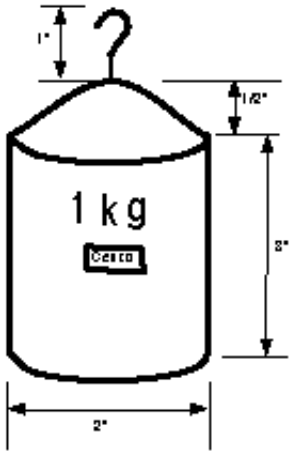

Front View of 1 Kilogram Mass

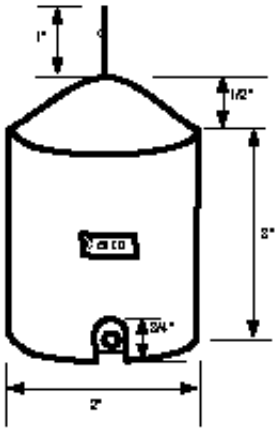

Side View of 1 Kilogram Mass

Rules: The rules for the event are as follows:

1. The cart will have to move on a linoleum floor and will be required to travel on a drag strip approximately 1 meter wide and 2 meters long. Carts exiting this drag strip through the sides will be disqualified. The starting line will be at one end of the drag strip and the finish line at the other. There will be an approximately 1 meter square area behind the starting line for set-up of the apparatus.

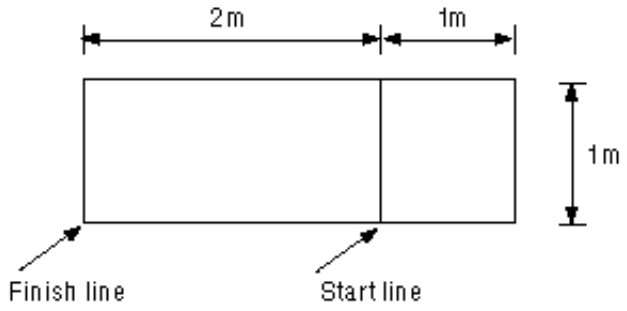

Schematic of track

2. No part of either the apparatus or the cart can be in front of the starting line before the mass is dropped. No external intervention is allowed after the release of the mass, with the only exception as given below.

3. The cart must remain in contact with the ground at all times and the wheels of the cart should not slip.

4. The timer will start when the flag on the cart crosses the starting line and will stop when the flag crosses the finish line. The winning score will be obtained by the cart that traverses the drag strip in the fastest time. External intervention is permitted to stop the cart after it completely exits the drag strip to prevent undue damage. The recommended form of this external intervention is a person or persons; positioning must be well clear of the finish line and is left to the descretion of the judges..

5. If the cart does not cross the finish line, a score inversely proportional to the distance travelled will be awarded. This score will be higher than that of any finishing cart; that is all carts that finish will place above a cart that does not. This distance will be the shortest distance from the front edge of the flag to the starting line.

6. Teams will be allowed two trials. A total time of 10 minutes is allowed for the setup and running of the two trials. The best score attained in the two trials will be used as the team score. In the event of a tie, both scores will be used to resolve the tie.

Mystery Event

This event will involve solving a simple experimentally oriented problem or problems using logic and knowledge of basic principles of physics.

Intuitive Physics Problems

Each team will be presented with a set of 5-10 problems. These problems can be solved either by using basic principles of physics or by the application of simple logic. Some problems may require a minimal amount of calculations. A team leader will be responsible for recording the answers arrived at by the group. Solving all the problems correctly should be your main objective (no team has yet scored 100%).

Rules for tie breaking:

1. Should two or more teams tie with a scores less than 100%, incorrect answers will be used as a basis for tie breaking.

2. Should two or more teams tie with a score of 100% then time will be used as a basis for tie breaking.

Jeopardy!

Teams will compete against each other to demonstrate general physics knowledge in a quiz show format based on the television show Jeopardy! In Jeopardy!, recall that the questions are phrased in terms of answers and contestants responses must be phrased in terms of a question. For example,

A: He won the Nobel Prize in 1918 for his discovery of energy quanta.

Q: Who was Max Planck?

Four teams will compete against each other in each game. Each game will consist of three rounds, Jeopardy, Double Jeopardy and Final Jeopardy.

The first two rounds, Jeopardy and Double Jeopardy, will each last 5 minutes. Each will consist of six categories with each with five answers. The categories will cover physics topics ranging from famous physicists to quantum physics. The five answers in each category will have point values worth 100, 200, 300, 400, 500 points in Jeopardy, and 200, 400, 600, 800, 1000 points in Double Jeopardy. The more an answer is worth, the more challenging it will be. The team selecting the first category and value will be chosen by random draw in Jeopardy and by highest score in Double Jeopardy.

Once the answer is revealed, teams will have five seconds to "buzz-in" to provide the correct question. The first team to "buzz-in" has five seconds to do so. If the correct question is not provided is the remaining eligible teams have an additional three seconds to "buzz-in". A correct question will add the answer's value to the team's score, and an incorrect one will take its value from the team's score. The team with the last correct response chooses the next category and value.

After each correct question, all teams will be required to rotate their team members to ensure that all team members participate in this event.

In Final Jeopardy, a category will be given, and the teams will have fifteen seconds to record how many points they wish to wager on the final answer. This number can be between zero and their score, inclusive. Only teams with a score greater than zero are allowed to compete in Final Jeopardy. Once the final answer is revealed, the teams will have one minute to write their question. The winner of the game is the team with the most points.

Game winners will be ranked according to their final point scores. The four top scoring game winners will compete in a final game of Jeopardy! to determine first through fourth place. The remaining places will be awarded first to remaining game winners according to point scores, then to all other teams according to point scores.

Ballistic Egg Event

This event involves the construction of a protective capsule which safely protects an egg during a ballistic flight and landing on a target. The capsule is to be constructed at the time of the event from the materials supplied by the event organizers. The package will be tested with a launcher supplied by the organizers. The contestants will need to do calculations based on uniformily accelerated motion in order to determine how to adjust the laucher so that their capsule hit the target. For example, what initial velocity do you need in order to hit the target.

Materials: The capsule and any supplements to the launcher must be made from the following materials that will be provided at time of the contest:

1 garbage bag (26 inch by 36 inch)
2 meters of zinc alloy wire (16 gauge; approximately 2 mm diameter)
3 meters of duct tape
2 styrofoam coffee cups (195 ml)
20 meters of unwaxed dental floss

Equipment: Teams will be provided with the following tools to calculate adjustments to launcher:

Calculator
Paper
Timing Device

The contestants will be allowed to use the tools they brought for the Rubber Band Boat Race to build their package.

Rules:

1. Contestants will have 12 minutes from the beginning of the event period to assemble the capsule from the materials provided and to calculate the adjustments of the launcher. The craft must carry 1 raw egg, which will be supplied by the event organizers at time of construction. The egg can be placed anywhere in the capsule; however it must be readily possible to determine the condition of the egg by inspecting it at time of landing. All, some or none of each provided material may be used in the construction of the craft.

2. At the end of the 12 minute period, contestants must line up for the first launch attempt. Each team will be given a total of two launch attempts; the best score out of the two attempts will be counted as the team score. The order of launch will be randomly chosen by the organizers; however teams will receive their first and second launch attempts in the same order. Teams will have the time between their first and second launch attempts to readjust the launcher or modify their capsule to improve their score. Only one set of materials may be used, although in case of breakage of the first egg, a second egg will be supplied.

3. The capsule and supplemental materials if any must be placed on the launch surface within a span of 90 seconds from the time the team is called to the launcher.

4. No form of external power or assistance of any kind may be given to the craft other than that provided by the launcher.

5. Interference from anyone on the team or the team's school with the craft at any point after its launch will be judged as a failed attempt and awarded a score of 0. External interference from other unanticipated sources may be judged as grounds for a re-launch as decided by the event judge. However, hitting walls or other fixed obstructions will not be grounds for a re-launch.

6. Score is based on how close to target and the condition of the egg. If the egg cannot be easily removed from the craft for inspection, the judge may disassemble or tear apart as much of the craft as necessary to determine the condition of the egg. Contestants are not given replacement materials to repair or replace any damage caused by making this

Back to cover page

THE SIXTEENTH

UBC PHYSICS OLYMPICS

RULE BOOK

FEBRARY 27, 1993

The Rules

- The Amazing Electrical Circuit
- Paper Boat Race
- Mystery Event
- Springy Thingy
- Wind Powered Crane
- Intuitive Physics Problems

Financial sponsorship is provided by the Rex Boughton Memorial Fund.

The UBC Physics Olympics is organized by the Department of Mathematics and Science Education and the Department of Physics

.

In the Spirit of Physics

The wording of each challenge in this year's rule book has been carefully prepared to define each task as precisely as possible. It is expected that all participants will produce solutions which comply with the task **as defined.** Normal physical interpretations will be applied to all the terminology used in defining the tasks. **Those solutions which, in the opinion of the judges, do not comply with the spirit and intent of the**

challenge, will be disqualified. General questions regarding the challenges may be directed to the coordinators of the Olympics. The coordinators will accept inquiries which may help them to prepare for unusually good solutions to the problem which may require special room conditions and/or measurement equipment.

General Rules

Each school may enter one official team made up of a maximum of five members. If space permits, each school may enter one additional, unofficial team in all events. Gold, silver and bronze medals will be awarded to the official teams scoring the highest, second highest and third highest aggregate scores. Both official and unofficial teams are eligible for these medals. In addition, gold, silver and bronze medals will be awarded to the official teams scoring the highest, second highest and third highest aggregate scores. The official teams must be designated at registration. **All teams must enter all events.** The events are scheduled so that it is possible for all teams to enter all events. All ties will be broken. A trophy will be awarded to the school sponsoring the official team achieving the highest aggregate score. Points scored by unofficial teams will not be included in the school championship aggregate.

TWO of the events require a pre-built structure. These entries must be checked in at the time of registration on the morning of the competition at which time they will be stored in a safe place until the time of the event.

Our Special Thanks to the Event Designers:

Hugh Thompson, Fayaz Khaki, Isaac Leung, Don Witt, Troy Millington, Doug Theissen, Gary Lim

and to

Dr. Brian Turrell, Head UBC Department of Physics and all students of the Physics and Physics Engineering program who assisted in this Physics Olympics**.**

Back to Olympics

The Amazing Electrical Circuit

This event will require teams to race to solve an electrical maze.

Materials: The following equipment will be provided: digital multimeters paper ruler

Rules:

1. Contestants are not allowed to bring or use any other materials or equipment than those provided with the exception of pens or pencils for writing.

2. Teams will be given a fixed circuit consisting of a DC power supply, a light emitting diode and some or all of the following components: resistors, capacitors, switches and diodes. The components may not necessarily be visually identifiable to the contestants; it may be necessary to identify them using their properties and the provided equipment. Recall that a diode is a component which allows the passage of current in only one direction. It is represented in a circuit diagram by where the arrow indicates the allowed direction. A capacitor is a charge storage device

with the property that it does not allow the passage of DC current. It is represented in a circuit diagram by . A switch is a device that allows current to pass in both directions when closed, and does not allow current to pass when open. It is represented by . A resistor changes the voltage across itself according to Ohm's law and is represented by . Finally, a DC power supply is represented by where the current flows from the negative to positive plate and larger plate is positive.

3. Each team will be expected to find a path through the circuit that will successfully cause the light emitting diode to go on. This path will be made by opening and closing switches.

4. Each team will also be expected to draw a circuit diagram of the entire maze. These diagrams will be turned in when the team has successfully solved the maze and will be used in the scoring.

5. Each team will be awarded a time based on the time that their circuit diagram is turned in to the event organizers. The winners of the event will be determined by the least time taken in finding a correct solution to the maze that passes through the least number of components.

6. In the unlikely event of a tie, the clarity and completeness of the circuit diagram will be a deciding factor in determining a winner.

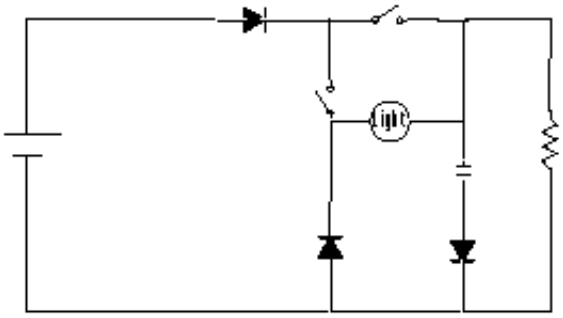

An example of a simple maze

Paper Boat Race

The object of this event is to build a paper sailboat that will sail the racecourse described below in the fastest possible time carrying the largest cargo of loonies.

Materials: The contestants will be required to bring the following three supplies:

1. A stapler with staples.

2. A supply of one dollar Canadian coins as needed.

3. Scissors.

The event organizers will be provided each team with exactly three 8.5 x 11in. sheets of paper. Also, everyone will be provided with access to a small testing tank with water to balance their boat before the race. Please, note that you will only be allowed to use the paper that is given to you by the event organizers. Since you will receive only three sheets of paper it is highly recommended that you practice before coming to the Olympics and bring a "blueprint".

Rules for construction of boat:

1. The boat must be constructed during a 10 minute period during the beginning of the event from no more than three 8.5 by 11 sheets of paper and staples. This paper will be 20 lb. long grain white copy paper of type typically used in copiers and will be provided by event organizers. An unlimited number of staples are allowed. The paper may be cut into any shape and as many pieces as desired. Contestants may bring a "blueprint" of their boat design to aid in the construction, but no piece of the blueprint may be incorporated into the boat itself.

2. The boat must not be longer than 9 inches and must have a sail that reaches a minimum height of 4 inches above the water line. The profile of the sail must be at least 1 inch wide at the height of 4 inches to ensure triggering of the timer.

3. The boat must be designed so that it will carry at least two Canadian one dollar coins (loonies). These loonies must be in normal circulating condition; i.e. loonies with holes in them or otherwise modified to make them lighter then their mint issue weight will be disallowed. All loonies used must be supplied by the contestants. As scoring will be based on a combination of the number of loonies carried and time, contestants may wish to design their boats to carry more than two loonies.

Racecourse: The course will consist of an 8 foot long by 3 foot wide by 5 inch deep trough filled with water. The starting gate will be placed 9 inches from one end of the trough and the finish gate will be placed 9 inches from the other end of the trough. There will be a source of wind power provided; it will be produced by a standard 22 inch by 22 inch box fan on low setting. The fan will be placed 3 to 4 feet away from the starting end of the trough.

Rules: For racing and scoring:

4. The back end of the boat will be placed against the end of the trough nearest to the starting gate and released by a member of the school team.

5. The timer will start when the sail crosses the starting gate and stop when the sail crosses the finish gate. The score will be proportional to this time.

6. The boats are allowed to hit the sides of the trough and will not be disqualified if they take on water, assuming that they finish.

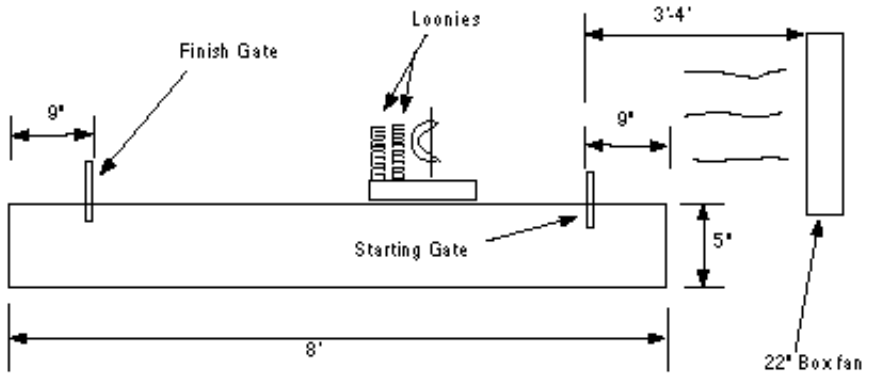

Side view of trough

7. The score will be computed by the formula t - (n-2)/4 where t is the time in seconds and n is the number of loonies transported by the boat across the finish line. After the race, contestants may fish any of their loonies lost overboard out of the trough.

8. Should there be a tie for best score, another set of time trials will be run to break the tie. The judge's decisions will be final.

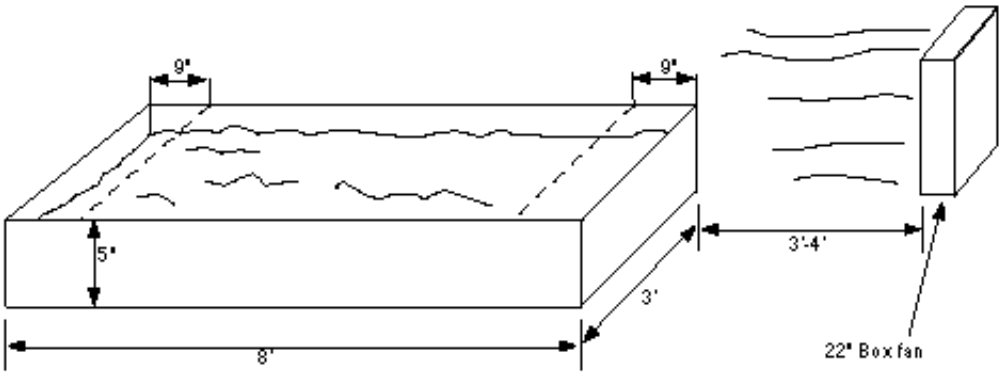

Perspective view of trough

Mystery Event

This event will involve solving a simple experimentally oriented problem or problems using logic and knowledge of basic principles of physics.

Springy Thingy

The goal of this event is to determine the spring constant of one of the two springs provided.

Materials:

- 2 springs
- 1 simple massive object (for example a steel ball)

- 1 bolt
- 2 nuts
- 1 washer
- 1 ruler
- 1 tubular object (not that its cross section may not be circular)
- 1 Magical Sheet of Information several mystery items

Using the above items, it*is* possible to determine the spring constant for one of the springs! You may find the following information helpful:

1. This is not an impossible exercise. The Magical Sheet of Information will be very helpful. So don't despair if you do not know how to solve it before you get to the event.

2. You will be allowed to bring a non-scientific calculator. Don't try to be sneaky, or we just might exercise the right to disqualify your calculator!

3. You may bring in as much blank paper and as many pencils and pens as you wish.

4. Your score will be based on your method of finding the spring constant and on the correctness of your answer. In case you finish quickly, there may also be bonus questions which may increase your score.

5. The invigilators are a really fun bunch of people, so don't be afraid to ask questions.

6. Since this event has to do with springs, the equations of motion to know are obvious. However, it wouldn't hurt to review other equations of motion.

And just to make life hard for you, here is a bonus hint: *You are sitting in a dark room, panting from your running. You're darn out of shape. holding the lamp close to your eyes, you carefully look it over. You notice a dark stain on the lamp, smelling suspiciously like A&W Cream Soda. You pull up you purple, long sleeved (size Medium) shirt and rub the stain off. As you rub it, I suddenly appear from the lamp. "Aha!" I cry, " You have released the Invigilator of the Physics Olympics. OOOH! Just wait and see what goodies I have for you!"*

Wind Powered Crane

This event is a pre-built. Contestants will build a wind powered crane which will lift a mass. The only source of power for the lifting of the mass will be provided by a fan. Any materials can be used to constructed the crane: some suggested materials are popsicle sticks, balsa wood, cardboard, monofila-ment fishing line and paper.

Apparatus:

1. The crane must be pre-built and checked in upon registration.

2. Before you start to set up your crane for the event, you must present the judge with a diagram of your crane which clearly labels all of its parts. Namely, the diagram must explicitly label the hoist, the gripper, and the mass as shown in the diagram to the right. The definitions of these parts are as follows:

- The crane is your whole machine.
- The mass is the object which your crane lifts and drops.

- The hoist is the lifting part of your crane.
- The gripper is the device which holds the mass during the lift and drops the mass. It will be attached to the hoist.

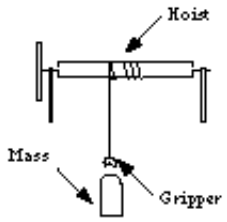

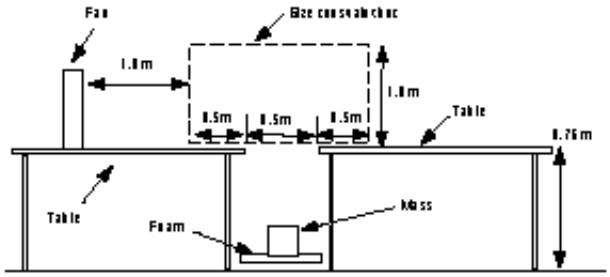

3. Everyone one will provide all three parts of the crane. Specifically note that everyone will provide their own mass. This mass can be constructed out any material or can be standard lab weights. It can be any shape so long as it fits in a box of dimension 20cm x 20cm x 20cm. You should bring several different masses so that you can try a lighter lift if your first one fails. Mass

4. The maximum size of the hoist is such that the part above the table will fit in a box of dimension 1.0m high x 1.5m wide x 1.0m deep as indicated in the diagram.

Rules:

5. The set-up for the event is illustrated in the diagram below. Please note that the table is only approximately 60cm wide even though the allowed width of the crane is 1.0m.

6. A wind will be provided by a 60cm by 60cm box fan set on high. The running time of the fan will be controlled by an automatic timer set at 1.0 minute.

7. The fan will be a minimum distance of 1.0m from the crane and will be 1.5m from the end of the table as indicated in the testing configuration diagram.

8. Only the power of the fan can be used for lifting. No other power sources or forms of energy can be used to lift the mass. However, note that other forms of energy such as potential energy may be utilized by the gripper.

9. Each team will be allowed two trials. A trial consist of a lift and a drop. Each trial can take no longer than of 1 minute. In each trial, different masses may be used. Teams will be given a total time of 10 minutes to set up and run the two trials.

10.The crane will start with the mass sitting on a foam crash pad and the gripper attached to the mass. The crane must lift the mass a minimum of 38cm as measured from the bottom of the mass to foam pad **and then drop it**. *It is important to note that no external intervention is allowed to control the crane nor is anyone allowed to touch the crane once a trial starts.*

11. The gripper is not counted as part of the mass lifted and must not be dropped.

12. The score will be given by the formula 100 WM / WH+G where WM is the weight of the largest mass lifted in a successful trial and WH+G is he weight of the hoist and gripper. Thus the lightest hoist and gripper that lifts the largest mass in a successful trial will win.

Intuitive Physics Problems

Each team will be presented with a set of 5-10 problems. These problems can be solved either by using basic physics principles or by the application of simple logic. Some problems may require a minimal amount of calculations. A team leader will be responsible for recording the answers arrived at by the group. Solving all problems correctly should be your main objective (no team obtained 100% last year). However, time will be used as a basis for breaking ties.

Back to cover page

THE FIFTEENTH

UBC PHYSICS OLYMPICS

RULE BOOK

MARCH 28, 1992

The Rules

- The Mass Powered Grand Prix
- The Egg-Shot
- Electrical Circuits
- Pepsi Can Boat Race
- Archimedes Principle
- Mystery Event

Financial sponsorship is provided by the Rex Boughton Memorial Fund.

The UBC Physics Olympics is organized by the Department of Mathematics and Science Education and the Department of Physics

.

In the Spirit of Physics

The wording of each challenge in this year's rule book has been carefully prepared to define each task as precisely as possible. It is expected that all participants will produce solutions which comply with the task **as**

defined. Normal physical interpretations will be applied to all the terminology used in defining the tasks. **Those solutions which, in the opinion of the judges, do not comply with the spirit and intent of the challenge, will be disqualified.** General questions regarding the challenges may be directed to the coordinators of the Olympics. The coordinators will accept inquiries which may help them to prepare for unusually good solutions to the problem which may require special room conditions and/or measurement equipment.

General Rules

Each school may enter one official team made up of a maximum of five members. If space permits, each school may enter one additional, unofficial team in all events. Gold, silver and bronze medals will be awarded to the official teams scoring the highest, second highest and third highest aggregate scores. Both official and unofficial teams are eligible for these medals. In addition, gold, silver and bronze medals will be awarded to the official teams scoring the highest, second highest and third highest aggregate scores. The official teams must be designated at registration. **All teams must enter all events.** The events are scheduled so that it is possible for all teams to enter all events. All ties will be broken. A trophy will be awarded to the school sponsoring the official team achieving the highest aggregate score. Points scored by unofficial teams will not be included in the school championship aggregate.

TWO of the events require a pre-built structure. These entries must be checked in at the time of registration on the morning of the competition at which time they will be stored in a safe place until the time of the event.

Our Special Thanks to the Event Designers:
Brian Dudra, Thang Lieu , Hugh Thompson, Fayaz Khaki, Pong Ling Hiew, Isaac Leung, Cyndy Araujo, Don Witt, Gary Lim, Rob McDuff,
and to

Dr. Brian Turrell, Head UBC Department of Physics, Dr. Michael Crooks, UBC Department of Physics and all students of the Physics and Physics Engineering program who assisted in this Physics Olympics**.**

Back to Olympics

The Mass Powered Grand Prix

This event will be held in the Scarfe lobby. This event involves the design of an apparatus that utilizes the energy produced by two 1 kilogram masses falling a maximum vertical distance of one meter to move an object a distance of **precisely 10 meters.**

Apparatus: The part of the apparatus that will be measured for distance is called the object. The entire apparatus can be the object itself. The object must be designated by the contestants before the beginning of the race.

1. The total energy for moving the object can **only** come from the energy produced by the two 1 kilogram masses falling a maximum vertical distance of one meter. The masses must be released from rest. The energy produced by the falling masses can be stored or converted into other forms by the apparatus for use in moving the object.

2. The two 1 kilogram masses will be supplied by the event organizers. They must be mounted on or utilized by the apparatus without altering them in any way and returned undamaged at the end of the event. Note that if the masses are to be attached to the apparatus, **they must be attached by string or fishing line** in order to satisfy the requirements of rule 1.

3. The apparatus must be constructed by the contestants themselves and should not consist mainly or exclusively of any sort of pre-purchased model kit or device.

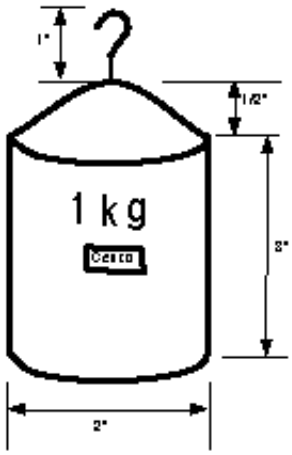

Front View of 1 Kilogram Mass

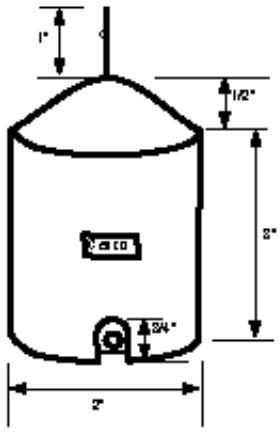

Side View of 1 Kilogram Mass

Rules: The rules for the event are as follows:

4.The object will have to move on a hard linoleum floor and will be required to complete their travel within an area approximately 12.0 meters long and 1.5 meters wide. Objects exiting this area will be disqualified. The object must remain in contact with the ground at all times. The starting line will be at one end of this rectangle and will be approximately 1.5 meters wide. There will be an approximately 1.5 meter square area behind the starting line for set-up of the apparatus.

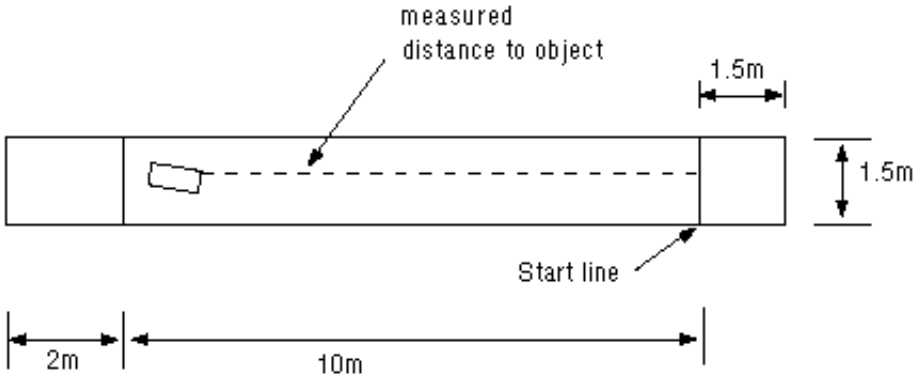

Schematic of Track

5. No part of either the apparatus or the object can be in front of the starting line before the masses are dropped. No external intervention is allowed after the release of the masses. **Specifically, no external intervention is allowed to stop the object.**

6. The maximum score will be attained by an object that travels a distance of precisely 10 meters. **The distance will be the shortest distance from the rearmost point of the object to the starting line.** Objects that travel either further or less than 10 meters will be assessed a penalty proportional to the absolute value of their distance minus 10 meters, i.e. $|d-10|$. The distance that the object travels will be measured after the object comes to a complete stop. Anything attached to the object is considered to be part of the object as well in the measurement of distance. A maximum time of 5 minutes is allowed for the object to travel.

7. Contestants will be allowed two tries. The best score attained in the two tries will be used as the team score. In the event of a tie, both scores will be used to resolve the tie. A final tie breaker will be the creativity of the apparatus design as judged by the event organizers.

The Egg-Shot

This event involves the construction of a craft capable of sustained flight which safely conveys and lands an egg. The craft is to be constructed at the time of the event from the materials supplied by the event organizers. The craft will be tested by a vertical launch from a launcher supplied by the organizers.

Materials: The craft and any supplements to the launcher must be made from the following materials that will be provided at time of the contest:

- 1 garbage bag (26 inch by 36 inch)
- 2 meters of zinc alloy wire (16 gauge; approximately 2 mm diameter)
- 3 meters of duct tape
- 2 styrofoam coffee cups (195 ml)
- 20 meters of unwaxed dental floss

Launcher: The launcher will be provided. It will consist of a horizontal platform on which the craft and any supplements must be placed. All parts must fit within a 0.6 meter diameter circle on the launch surface. The launcher will impart an average force of approximately 13 Newtons to the craft over approximately 0.4 meters of vertical travel. (For the purposes of prototyping a craft, this is roughly equivalent to an underhand toss.) Any supplemental materials such as dental floss and craft supports may be attached with duct tape within the 0.6 meter diameter circle on the launcher.

Landing: If weather conditions permit, the event will be conducted outdoors. If necessary, the event will be carried out on the stage of Scarfe 100 and the launcher will be placed against the back wall of the stage in a central location. The ceiling height of this room is sufficient to ensure that craft will not hit the ceiling. Measures will be taken to ensure fairness in the event of obstacles being hit; however craft striking fixed immovable objects such as walls will not be given an additional launch attempt.

Rules: The rules for the competition and scoring are as follows:

1. Contestants will have 12 minutes from the beginning of the event period to assemble the craft from the materials provided. The craft must carry 1 raw egg, which will be supplied by the event organizers at time of construction. The egg can be placed anywhere in the craft; however it must be readily possible to determine the condition of the egg by inspecting it at time of landing. All, some or none of each provided material may be used in the construction of the craft. The material may also be used to make supplements to the launch pad such as supports for the craft. Sketches or blueprints of any size may be brought to the event but neither they nor any other material except those specified above may be used for any part of the team's entry. Wire cutters and scissors will be provided.

2. At the end of the 12 minute period, contestants must line up for the first launch attempt. Each team will be given a total of two launch attempts; the best score out of the two attempts will be counted as the team score. The order of launch will be randomly chosen by the organizers; however teams will receive their first and second launch attempts in the same order. Teams will have the time between their first and second launch attempts to rebuild or modify their craft to improve their score. Only one set of materials may be used, although in case of breakage of the first egg, a second egg will be supplied.

3. The craft and supplemental materials if any must be placed on the launch surface within a span of 90 seconds from the time the team is called to the launcher.

4. The actual launch of the craft will be conducted by an event organizer.

5. No form of external power or assistance of any kind may be given to the craft other than that provided by the launcher.

6. Interference from anyone on the team or the team's school with the craft at any point after its launch will be judged as a failed attempt and awarded a score of 0. External interference from other unanticipated sources may be judged as grounds for a re-launch as decided by the event judge. Howev-er, hitting walls or other fixed obstructions will not be grounds for a re-launch.

7. If the egg is cracked or broken upon landing, the attempt is considered as failed and a score of 0 is awarded. If the egg cannot be easily removed from the craft for inspection, the judge may disassemble or tear apart as much of the craft as necessary to determine the condition of the egg. Contestants are not given replacement materials to repair or replace any damage caused by making this determination.

8. If the egg is unbroken upon landing, the score will be directly proportional to the time of flight. The time of flight will be measured from the time that the launcher begins its motion to the time that the craft first touches the ground. For scoring purposes, the launcher itself is defined to be part of the ground.

9. Ties will be resolved by the distance that the egg travels from the launcher. The furthest distance will win. The distance will be measured as the radial distance from the launcher to the point of first touchdown of the egg.

Hints: This event gives the best results to a true team effort; namely by having one person build an egg carrier, another cutting dental floss, a third cutting up the garbage bag, etc. If you wish to pre-test your ideas, it is suggested that you first try them using some non-breakable object the same mass as the egg.

Electrical Circuits

This event will require teams to solve a small number of circuit problems involving components such as resistors, capacitors, light bulbs, switches and diodes.

Materials: The following equipment will be provided: digital multimeters sufficient components to assemble all circuit problems a non-programmable calculator

Rules:

1. Contestants are not allowed to bring or use any other materials or equipment than those provided with the exception of pens or pencils for writing.

2. Teams will be provided with a sheet containing circuit problems at the beginning of the event. The teams are responsible for correctly assembling the corresponding circuits from these diagrams and the equipment provided. The teams must then add or modify a component in the circuit that will change its behavior in the required fashion. A simple example is provided the diagram below; given this circuit, find the size of the resistor that when added in series makes the

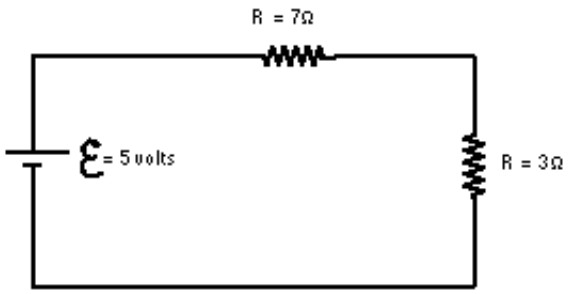

Simple Example of Circuit Diagram

current in the circuit become .25 A. Contestants should expect that the circuit problems at the event will typically be more difficult than this example.

3. Teams must draw in the component in the correct place on their circuit problem sheet and clearly label its value on the sheet. Teams must turn in their circuit problem sheets when they have completed the event or at the end of 30 minutes. No more than 30 minutes will be allowed for the completion of this event.

4. Teams are encouraged to test whether or not their solution is correct by "purchasing" the necessary size component from the event organizers. The event organizer will dispense the requested amount of resistance, capacitance, etc. upon written request of the team.

5. The score will be based on the number of correct answers less a factor based on the number of "purchases". For example, a team may receive a score of 5 for a correct solution to a circuit obtained with either 0 or 1 "purchase", a score of 4 for a correct solution obtained with 2 "purchases", a score of 3 for a correct answer obtained with 3 "purchases" and so on. An incorrect answer will receive a score of 0. Therefore, it is to a team's benefit to check their solutions!

6. Ties will be resolved by time; the team that obtains the maximum score in the fastest time will win.

Pepsi Can Boat Race

The object of this event is to build a sailboat out of no more than 3 standard Canadian Pepsi cans that will sail the racecourse described below in the fastest possible time.

Materials: Rules for construction of boat:

1. The boat must be constructed only from the pieces of no more than 3 standard 375 ml **aluminum** Canadian-made Pepsi cans. You may cut, bend, crimp, puncture, etc. the three cans, but **may not use any other material what-so-ever in the construction of the boat**.

2. The boat must not be longer than 9 inches and must have a minimum height of 4 inches above the water line.

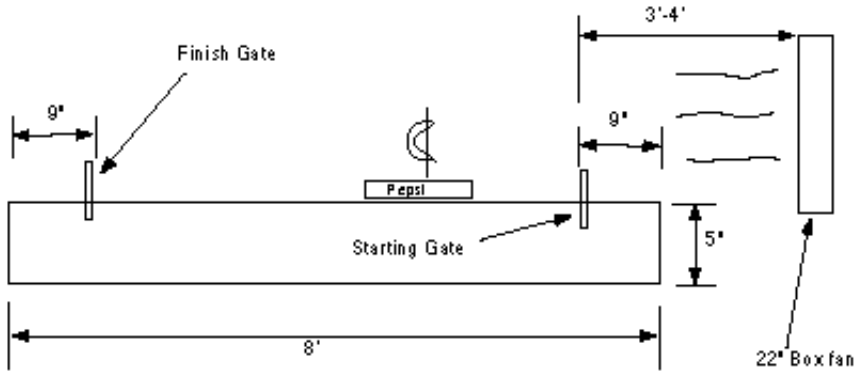

Side View of Trough

Racecourse: The course will consist of an 8 foot long by 3 foot wide by 5 inch deep trough filled with water. The starting gate will be placed 9 inches from one end of the trough and the finish gate will be placed 9 inches from the other end of the trough. There will be a source of wind power provided; it will be produced by a standard 22 inch by 22 inch box fan on low setting. The fan will be placed 3 to 4 feet away from the starting end of the trough.

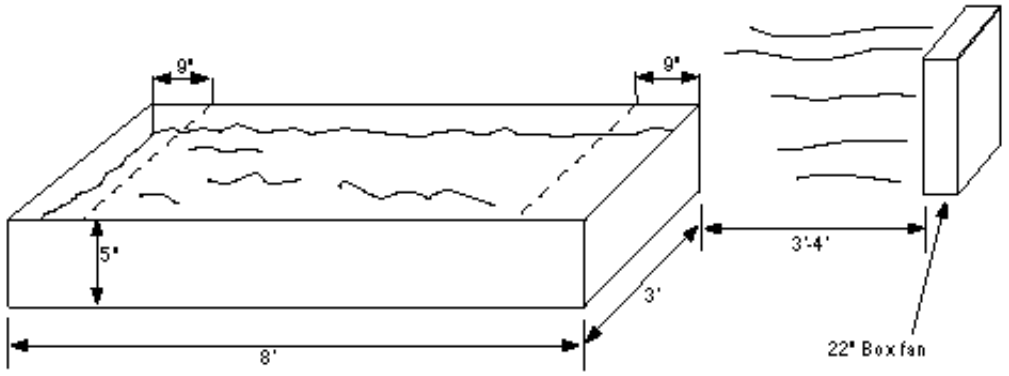

Perspective View of Trough

Rules: For racing and scoring:

3. The back end of the boat will be placed against the end of the trough nearest to the starting gate and released by a member of the school team.

4. The timer will start when the sail crosses the starting gate and stop when the sail crosses the finish gate. The

score will be proportional to this time.

5. The boats are allowed to hit the sides of the trough and will not be disqualified if they take on water, assuming that they finish.

6. Should there be a tie for the best time, another set of time trials will be run to break the tie. The judge's decisions will be final.

Additional Information:

7. Each boat will be weighed upon arrival to ensure that it is not made of more than the allotted 3 Pepsi cans.

8. Judges reserve the right to disassemble any boat to check its composition after the time trials are completed. If materials other than those from Pepsi cans are used, the boat will be disqualified.

9. Contestants should take care when building their boats. Pepsi cans are fun to work with but watch out for sharp edges! Hint: One can obtain a flat piece of aluminum by making the indicated cuts on a Pepsi can.

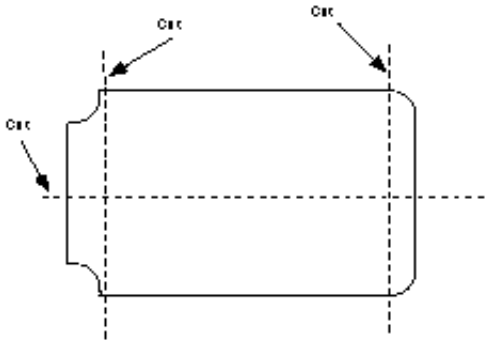

Archimedes Principle

Teams will be required to determine the densities of various unknown fluids using Archimedes principle. There may be one or more immiscible fluids in any given container.

Equipment: Teams will be provided with: A scale (for weighing) A ruler A non-programmable calculator Water Objects of various known densities Containers filled with various unknown fluids

Rules:

1. Contestants will be allowed to bring **only** writing utensils (for the **sole** purpose of making legible marks on paper) and their own brains.

2. Teams will not be permitted to use their own calculators; the event organizers will provide a non-programmable calculator for use during this event.

3. The team's score will be based on the accuracy of the densities determined for the various unknown fluids. At the time of the event there will be a short bonus question that will be used to resolve ties.

4. Teams are allowed a total time of 30 minutes to complete this event.

5. Teams are allowed to bring and use the following lucky charms:

- 1 left foot Women's Air Nike shoe, size 7 1/2, any color
- 1 Cherry Flavored Gummi Bear

Mystery Event

Can you be cool under pressure? This event will involve the ideal gas law (Boyle's law). Also, know how to calculate volumes, surface areas, and circumferences of simple 3-D geometries (i.e. cubes, spheres, pyramids, etc). Bring a non-programmable calculator; note that this property will be verified by the event organizers.

Back to cover page

This page intentionally left blank